SMART HOPPING® 2.0 Access Point 2.4GHz (RTX3471)

Installation guide

Trademarks

RTX and all logos thereof are trademarks of RTX A/S, Denmark.
Other product names used in this publication are for identification purposes and may be trademarks of the respective companies.

Disclaimer

This document and the information contained is property of RTX A/S, Denmark. Unauthorized copying is not allowed. The information in this document is believed to be correct at the time of writing. RTX A/S reserves the right at any time to change said content, circuitry, and specifications.

Confidentiality

This document should be regarded as confidential.

FCC notice

These devices comply with part 15 of the Federal Communications Commission (FCC) Rules. Operation is subject to the following two conditions: (1) these devices may not cause harmful interference, and (2) these devices must accept any interference received, including interference that may cause undesired operation.

Pursuant to Part 15.21 of the FCC Rules, any changes or modifications to this equipment not expressly approved by RTX A/S may cause harmful radio frequency interference and void your authority to operate this equipment.

Disclaimer

The information contained in this document is subject to change without notice. RTX A/S makes no warranty of any kind with regard to this material, including, but not limited to, the implied warranties or merchantability and fitness for a particular purpose. RTX A/S shall not be liable for errors contained herein or for incidental or consequential damages in connection with the furnishing, performance, or use of this material.

© 2026 RTX A/S, Denmark, all rights reserved
Stroemmen 6, DK-9400 Noerresundby
Denmark
P. +45 96 32 23 00
F. +45 96 32 23 10
www.rtx.dk

Additional information:
Ref: SHA, KMR, HDJ
Reviewed by: STA

Contents

1 About this guide 5

1.1 Audience 5
1.2 Document organization 5
1.3 Notational conventions 5
1.4 References 6
1.5 Terms and abbreviations 6
1.6 Document history 7

2 Overview 8

2.1 Introduction 8
2.2 General description of the SMART HOPPING® Access Point 9
2.2.1 Access Point mounting options 9
2.2.2 Power source 10
2.2.3 Synchronization signal 10
2.2.4 Wireless client mobility 10
2.2.5 Technical alerts 10
2.2.6 Firmware updates 10
2.2.7 Management interfaces 11
2.2.8 Web-based interface 11
2.3 Connectors and status indicators 11
2.3.1 SMART HOPPING® 2.0 Access Point connectors 11
2.3.2 SMART HOPPING® 2.0 Access Point status LEDs 12
2.4 Specifications 15
2.5 Ordering information 17
2.6 Regulatory information 17
2.6.1 FCC compliance 17
2.6.2 [Thailand] NBTC compliance 17
2.6.3 Symbol definitions 18

3 Mount and install the SMART HOPPING® 2.0 Access Point 21

3.1 Access Point placement guidelines 21
3.2 Mounting the SMART HOPPING® 2.0 Access Point to a wall 22
3.2.1 Installation 23
3.3 Mounting the SMART HOPPING® 2.0 Access Point to a wall (with cosmetic cover) 26
3.3.1 Installation 27
3.4 Flush ceiling mount (with cosmetic ring) 31
3.4.1 Required materials 31
3.4.2 Assemble the Access Point, adapter plates, mounting bracket, and cosmetic ring 32
3.5 Mount below ceiling tile 37
3.5.1 Assemble the Access Point, adapter plates, and mounting bracket 38
3.6 Mount below ceiling tile (with cosmetic cover) 43
3.6.1 Mount the cosmetic cover and attach the adapter plates to the mounting bracket 44
3.7 Mounting the SMART HOPPING® 2.0 Access Point with a tether mount (optional) 50
3.8 Installation procedure 51
3.9 Access Point startup sequence 51
3.10 Access Point configuration information 51

4 Maintaining the SMART HOPPING® 2.0 Access Point 52

4.1 Access Point test and inspection 52
4.2 Troubleshooting the Access Point using its LEDs 52
4.3 Replacing the Access Point 52

4.4 Replacement parts 52

Figures

Figure 1: SMART HOPPING® 2.0 Access Point infrastructure 8
Figure 2: SMART HOPPING® 2.0 Access Point 9
Figure 3: SMART HOPPING® 2.0 Access Point connectors 11
Figure 4: Access Point status LEDs 12
Figure 5: SMART HOPPING® 2.0 Access Point 51

Tables

Table 1: Access Point ethernet interface pin signals 12
Table 2: Access Point status LEDs 14
Table 3: SMART HOPPING® 2.0 Access Point specifications 16
Table 4: SMART HOPPING® 2.0 Access Point part number and content 17
Table 5: SMART HOPPING® 2.0 Access Point mounting accessories 17
Table 6: Approval IDs 17
Table 7: SMART HOPPING® 2.0 Access Point symbol definitions 19
Table 8: Product warnings 20
Table 9: Required wall mounting material 22
Table 10: Step-by-step guide - how to mount Access Point to a wall 25
Table 11: Required wall mounting material 26
Table 12: Step-by-step guide - how to mount Access Point with cosmetic cover to a wall 30
Table 13: Required parts for flush mounting with cosmetic ring 31
Table 14: Step-by-step guide - flush ceiling mount with cosmetic ring 36
Table 15: Required parts to mount below ceiling tile 37
Table 16: Step-by-step guide - how to mount the Access Point below ceiling tile 42
Table 17: Required parts to mount below ceiling tile with cosmetic cover 43
Table 18: Step-by-step guide - how to mount Access Point with cosmetic cover below ceiling tile 49
Table 19: Ordering Access Point replacement parts 52

1 About this guide

SMART HOPPING® 2.0 Access Point 2.4GHz installation guide provides complete instructions and procedures for installing the SMART HOPPING® 2.0 Access Point 2.4GHz. This section describes the document and includes:

- Audience
- Document organization
- Notational conventions
- Related documentation
- Terminology

1.1 Audience

This installation guide is for trained service personnel who install the SMART HOPPING® 2.0 Access Point (AP) as part of an overall SMART HOPPING® deployment.

1.2 Document organization

The information in this guide is organized and presented as follows:

- *Overview* in section 2 describes the SMART HOPPING® 2.0 AP and how it provides a bidirectional data flow between the Information Center server and patient monitor devices.

- *Mount and Install the SMART HOPPING® 2.0 Access Point* in section 3 includes instructions for physically installing the SMART HOPPING® 2.0 AP, including mounting the AP to a wall, flush with a ceiling tile, below a ceiling tile, and tether mounted.

- *Maintaining the SMART HOPPING® 2.0 Access Point* in section 4 provides procedures to maintain and troubleshoot operation of the SMART HOPPING® 2.0 AP.

1.3 Notational conventions

This guide uses the following notational conventions to convey information:

Warning	A warning alerts you to a potential serious outcome, adverse event, or safety hazard. Failure to observe a warning may result in death or serious injury to the user or patient.
Caution	A caution alerts you to where special care is necessary for the safe and effective use of the product. Failure to observe a caution may result in minor or moderate personal injury or damage to the product or other property, and possibly in a remote risk of more serious injury.
Note	A note contains additional information on the product.

1.4 References

Refer to these other documents for other installation service information about the SMART HOPPING® infrastructure:

Reference	Document name
1	*SMART HOPPING® 2.0 Access Point Controller Installation Guide* - provides procedures for physically installing and powering the SMART HOPPING® APC at the clinical site.
2	*SMART HOPPING® 2.0 Infrastructure Installation and Service Guide* - provides complete information and procedures to install, configure, inter-connect, and deploy the SMART HOPPING® infrastructure at the clinical site. This document includes site planning guidelines, procedures for use of the APC command line and graphical user interfaces, AP configuration procedures, and APC and AP firmware deployment procedures.
3	*SMART HOPPING® Synchronization Unit Installation Guide* - lists procedures to install the SMART HOPPING® Sync Unit at the clinical site.
4	*SMART HOPPING® 2.0 Upgrade Guide* - gives instructions on upgrading SMART HOPPING® infrastructure (APs and APCs).

1.5 Terms and abbreviations

Terms / abbreviations	Description
Access Point (AP)	A SMART HOPPING® component that provides bidirectional wireless access to the monitoring network for patient monitor devices.
Access Point Controller (APC)	A SMART HOPPING® component used to manage the operation of the APs. One APC is elected as the leader APC. The leader APC supports the web interface to the system and manages the configuration.
Access Point group	A logical grouping of APs. AP members of the same AP group inherit common configuration settings (defaults). AP groups often map logically to the clinical units in which the SMART HOPPING® infrastructure is being installed.
FCC	Federal Communications Commission
Partnered APC	Configurable element within an AP Group used to determine which APC manages the operation of the AP members of a particular AP Group.
Patient monitor devices	Patient monitor devices relay real-time physiological waveforms and trends to the Information Center.
POST	Power-on-Self-Test
RF	Radio Frequency
STP cable	Shielded Twisted Pair cable
SMART HOPPING® infrastructure	Proprietary wireless network designed for continuous monitoring that provides two-way communications between patient monitor devices, and the Information Center.
SMART HOPPING® Infrastructure Service Tool	The software used to upgrade SMART HOPPING® APCs and APs, verifying that APCs on the network are configured correctly and display warning and error messages that may be used to troubleshoot any configuration errors that may exist on the SMART HOPPING® network. The SMART HOPPING® Infrastructure Service Tool is also referred to as the Upgrade Tool. This tool was previously referred to as the Upgrade Wizard.
SMART HOPPING® network	This term refers to the entire SMART HOPPING® network. In a routed topology, the network includes the routers and all inter-connected database domain(s) and the SMART HOPPING® infrastructure wireless subnet.
Synchronization (Sync) Unit	The SMART HOPPING® Sync Unit provides a necessary common clock signal to synchronize all the APs in the system. When patients move around the hospital coverage area their transmitted data are handed over from one AP to another seamlessly without interruption or data loss.
System ID	Configurable element in the APC configuration that logically associates APs and APCs operating within the same SMART HOPPING® infrastructure.
Uninterruptible Power Supply (UPS)	The UPS supplies backup power to protect against hospital generator change-over interruptions and short power line transients.

Terms / abbreviations	Description
UTP cable	Unshielded twisted pair cable
VDC	Volts Direct Current

1.6 Document history

Revision	Resp.	Date	Comments
1.0	HDJ/BKI	16-Oct-2025	First published version.
1.1	SHA	22-Oct-2026	Subsection 2.4 (Specifications), both "Legacy mode (SMART HOPPING® 1.0)" and "Advanced mode": Antenna gain has been updated from 3 dBi to 4 dBi. Power output has been updated. Subsection 2.6 (Regulatory information): Table has been updated to include ID for relevant countries. Regulatory notice for Thailand has been added. Editorial update: Column “Software” has been removed from table under subsection 2.6 regulatory information. Subsection 2.6.6 (Symbol definitions) updated. A list of certificate holders / Importers has been added as a part of subsection 2.6.6 (Symbol definitions).

2 Overview

This section provides a high-level overview of the SMART HOPPING® 2.0 AP including:

- Introduction in subsection 2.1
- General description of the SMART HOPPING® 2.0 Access Point in subsection 2.2
- Connectors and status indicators in subsection 2.3
- Specifications in subsection 2.4
- Ordering information in subsection 2.5
- Regulatory information in subsection 2.6
- Warnings in subsection 2.6.3.1

2.1 Introduction

The SMART HOPPING® infrastructure uses a wireless architecture that is similar to cellular networks to provide two-way communications between patient monitor devices and the Information Center server.

Using the SMART HOPPING® wireless protocol, the SMART HOPPING® infrastructure provides monitoring capabilities for ambulatory patients within a wide coverage area.

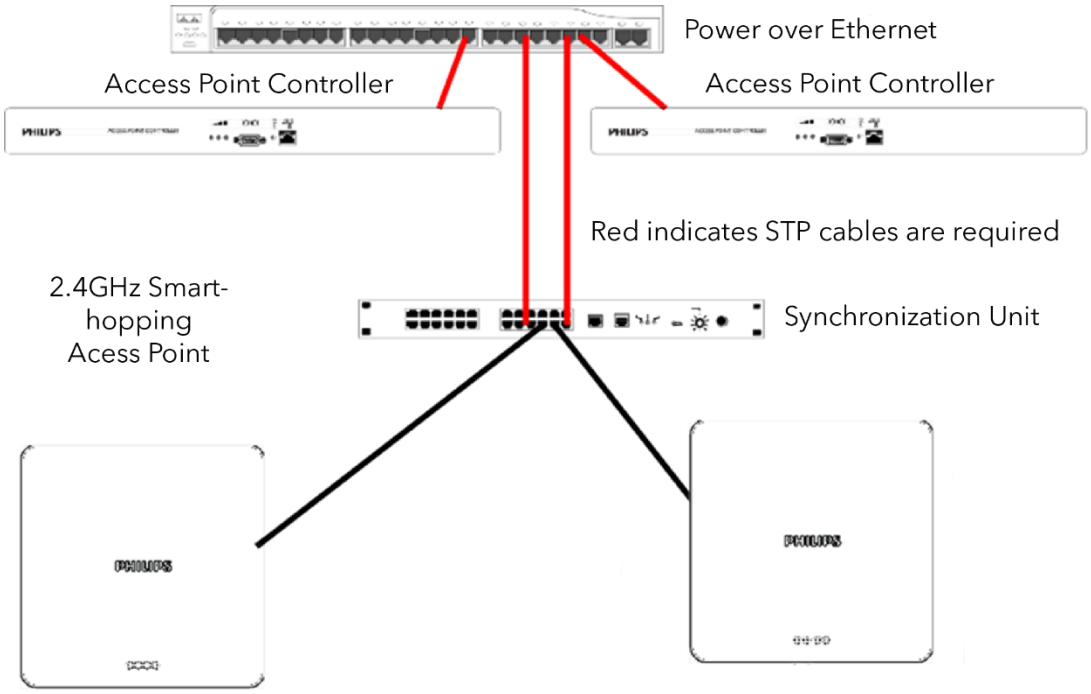

Figure 1: SMART HOPPING® 2.0 Access Point infrastructure

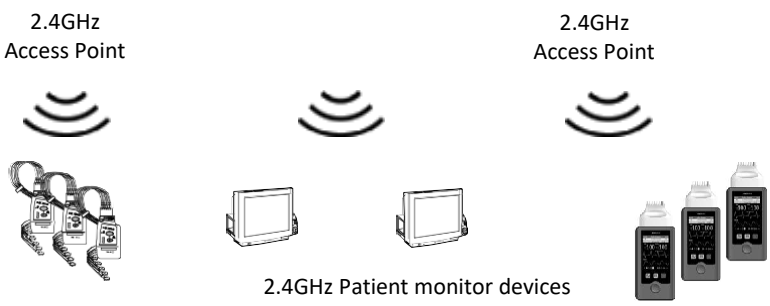

You can configure the APC to communicate with SMART HOPPING® 2.0 APs. 2.4GHz AP can only communicate with 2.4GHz patient monitor devices.

SMART HOPPING® networks utilize a cognitive radio that senses the RF environment and adapts to it. Dynamic wireless channel allocation ensures the best use of available wireless spectrum. The SMART HOPPING® infrastructure is designed to co-exist with other 802.11 wireless deployments.

2.2 General description of the SMART HOPPING® Access Point

The SMART HOPPING® 2.0 AP, shown in figure 2, provide an air-link to transmit and receive data between patient monitor devices and the Information Center server via the SMART HOPPING® infrastructure.

Access Point

Figure 2: SMART HOPPING® 2.0 Access Point

Warning Mounting APs must be performed by qualified personnel, using certified conductors and following national electrical codes.

The AP is a modular antenna infrastructure consisting of an AP that contains two internal antennas.

Note The effective range of the AP is typically 32 feet. The AP supports a maximum of 18 patient monitor devices.

When monitored patients are ambulatory, data roaming is handled seamlessly between the other APs in the coverage area. The AP can be mounted out of the way on corridor walls, or above or below ceiling tiles.

2.2.1 Access Point mounting options

Wall-mounting hardware is standard. There are also options available for mounting APs to ceiling tiles (mounted on the tile or flush-mounted with the tiles). The part numbers for these options include the following:

- **94100009**: RTX3471 SH2.0 Access Point 2.4GHz (includes hardware for wall mounting)
  - **94100014**: SH2.0 Cosmetic cover (optional)

- **94100009**: RTX3471 SH2.0 Access Point 2.4GHz mounting hardware options:
  - Basic ceiling mount – **94100012**: SH2.0 Frame rail[1] with **94100014**: SH2.0 Cosmetic cover (optional)
  - Flush ceiling mount – **94100012**: SH2.0 Frame rail[1] with **94100013**: SH2.0 Cosmetic ring

[1] Only available for the US and Canadian markets.

2.2.2 Power source

The SMART HOPPING® 2.0 AP receives its 48 VDC operating power source via its ethernet LAN cabling from PoE via the SMART HOPPING® Sync Unit. The AP is not equipped with a power socket. The AP internally generates a variety of voltages used for its internal components.

2.2.3 Synchronization signal

The AP receives a synchronization signal from a network of Sync Units that enables a patient monitor device to hand over data seamlessly between APs within the coverage area when a patient is ambulatory and to transfer data to the Information Center server without interruption. Each Sync Unit provides synchronization for up to 12 APs. The sync signal distributes the common reference clock signal needed by the SMART HOPPING® infrastructure.

2.2.4 Wireless client mobility

The SMART HOPPING® infrastructure supports seamless roaming of wireless clients within the area of coverage. This roaming is accomplished via communications between the wireless clients and the APs as follows.

As a wireless client is moved around a building, it automatically monitors the quality of the wireless link to its current AP (and it also detects the presence of other APs). When the quality starts to deteriorate, the wireless client automatically establishes a new connection to another AP.

The patient monitor device remains connected to two APs for a finite time, and thus the same data is received by these APs. During this time, information for header compression and other data for the connection is routed to the new AP.

One of the two APs then releases the radio connection. If a packet is in progress when a handover occurs, then the packet is reassembled co-operatively between the two APs.

The Information Center server receives an unbroken flow of complete IP packets.

2.2.5 Technical alerts

Each AP is configured to signal alert conditions that are viewed by a central network management system. The AP is configured to raise alerts on error conditions. The alerts are sent over the SMART HOPPING® and ethernet LAN infrastructure to a monitoring station or database server. The AP raises an alert if:

- If data loss exceeds the configured threshold
- It loses its synchronization signal

For small systems having only one AP and no Sync Unit, you can configure the AP to suppress the loss of synchronization signal alert.

Note The SMART HOPPING® APC provides System Alerts such as loss of synchronization, high data loss, AP hardware failure, and over capacity. Also, when redundant APCs are installed, the APC provides a system alert for APC hardware or software failure.

2.2.6 Firmware updates

Firmware on the SMART HOPPING® 2.0 AP is upgraded from the Upgrade Tool – for more details, please refer to reference no. 2. The AP firmware image is provided on the RTX Download Center.

2.2.7 Management interfaces

The AP supports the full range of management interfaces via the SMART HOPPING® APC. These interfaces also enable you to view the status of the AP including the following information:

- System configuration, such as firmware version
- Connection information, such as numbers of packets received and transmitted, and number of errors
- Waveform data information, such as total number of seconds of data sent and lost

The AP statistics can be read by remote devices (such as a central network management system) using the Scalable Node Address Protocol (SNAP).

2.2.8 Web-based interface

You can display the following status items using the APC web-based interface:

- AP name
- Physical address
- Partnered APC
- IP address
- Subnet mask
- Default gateway
- AP type

The AP has its own web-based interface, where you can view and configure the following:

- Status
- lighttpd error log
- Change password
- Syslog (last 100 or last 1,000,000 entries (Syslog all)
- lighttpd access log
- Multicast

2.3 Connectors and status indicators

Figure 3 below shows the connectors on the AP:

SMART HOPPING® 2.0 Access Point

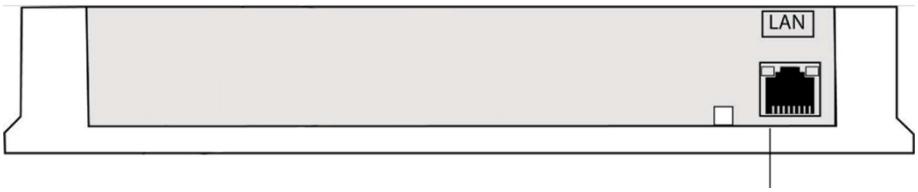

Figure 3: SMART HOPPING® 2.0 Access Point connectors

Ethernet interface that connects to the SMART HOPPING® Sync Unit

2.3.1 SMART HOPPING® 2.0 Access Point connectors

Note the following connectors on the SMART HOPPING® AP:

- **Ethernet interface (LAN)** - The AP provides a 100-Base-T ethernet interface with an RJ45 connector to connect the AP to the SMART HOPPING® Sync Unit.

  The AP ethernet interface provides data communications to and from the Information Center over the SMART HOPPING® LAN infrastructure. It also presents the power and synchronization signals required

by the AP. The synchronization signal is superimposed on the power supply voltage. Table 1 below lists the pin signals for the AP ethernet interface.

Pin	Signal description
1	Transmit pair TX + conductor, can receive PoE
2	Transmit pair TX - conductor, can receive PoE
3	Receive pair RX + conductor, can receive PoE
4	+ 48 VDC power and synchronization
5	+ 48 VDC power and synchronization
6	Receive pair RX - conductor, can receive PoE
7	0 V power return
8	0 V power return

Table 1: Access Point ethernet interface pin signals

2.3.2 SMART HOPPING® 2.0 Access Point status LEDs

When powering on the SMART HOPPING® 2.0 AP, it runs a Power-On-Self-Test (POST). During the POST, the LED indicators flicker and illuminate continuously (AMBER) to indicate correct startup operation. Next, the power-on LED illuminates (GREEN) continuously to indicate that the 48 VDC power and sync signal are being supplied, and the other two (AMBER) LEDs change color (or turn off), depending on the status of the AP. Table 2 below summarizes the status the AP LEDs:

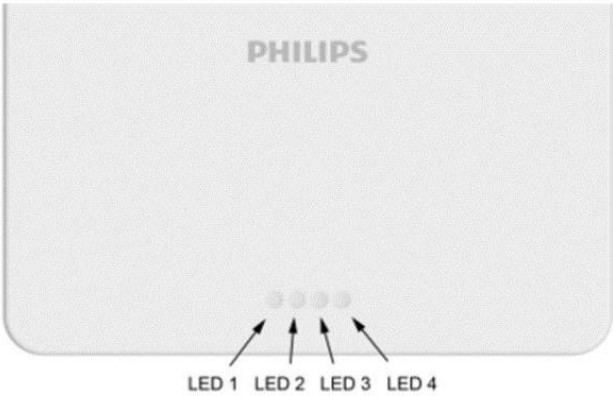

Figure 4: Access Point status LEDs

LED1 – Power/Sync	LED2 – Network	LED3 – Radio	LED4	Status
Green	Flashing green	Flashing green	Off	Power/sync, network, and radio are working properly.
Flashing green	Flashing green	Flashing green	Off	The AP has lost remote synchronization. Check connection and functionality of the Sync Units connected upstream of the directly connected Sync Unit.
Green	Flashing green	Flashing amber	Off	Power/sync, network, and radio are working properly.

LED1 – Power/Sync	LED2 – Network	LED3 – Radio	LED4	Status
Green	Flashing green	Flashing red	Off	Power/sync and network are working properly. There is an issue with the radio. Confirm proper operation of the AP by rebooting the AP. Replace the AP if after a reboot, the radio LED does not flash green (normal operation for the AP).
Amber	Amber	Amber	Amber	LEDs that display during the AP initial POST and in the secondary stage of startup.
Amber	Amber	Amber	Off	The AP is not registered to any APC. Check network connectivity from the AP to the APCs. Basic SMART HOPPING® network discovery uses broadcast for layer 2 deployments and multicast for layer 3 deployments.
Flashing red	Flashing green	Flashing green	Off	The AP has lost local synchronization (no synchronization pulses). Check the connection and functionality of the directly connected Sync Unit.
Red	Off	Off	Off	If the AP is in this state for more than 5 seconds, this indicates that the AP has power but has a hardware fault in another area. Replace the AP.
Flashing red	Flashing red	Flashing red	Off	Hardware POST failure (there is an issue with one or more of the following components: DRAM, flash memory, CPU, radio, LAN interface). Replace the AP.
Off	Off	Off	Off	In normal operation, the APC web page configuration turned off the LEDs. If the LEDs have not been configured off, the AP is not receiving power. Confirm that the PoE switch port is enabled and sending power. Check connectivity from the AP (through the Sync Unit) to the PoE switch.

LED1 – Power/Sync	LED2 – Network	LED3 – Radio	LED4	Status
Blue	Off	Off	Off	Service event in progress: The AP is receiving new firmware. The system continues to operate normally. After the download is complete, APs must be restarted to accept the new image. This can be managed by the SMART HOPPING® Infrastructure Support Tool.
Blue	Blue	Blue	Blue	The AP failed to boot its firmware or lost power during startup. The AP starts using its last known valid firmware image. Check compatibility and re-run the Upgrade Tool or replace the AP.

Table 2: Access Point status LEDs

2.4 Specifications

Specification	Value
Physical:	
Chassis (only) dimensions (H x W x L)	30 mm x 163 mm x 163 mm (1.2 in x 6.38 in x 6.38 in)
Weight with internal antennas	<600 g (<1.32 lb)
Mounting options	• Wall mount (standard) • Wall mount with cosmetic cover • Flush ceiling mount with cosmetic ring • Mount below ceiling tile • Mount below ceiling tile with cosmetic cover
Environmental:	
Operating temperature	0 to +55°C (32 to 131°F)
Storage temperature	-40 to +60°C (-40 to 140°F)
Humidity range (operating)	< 95% RH @ 40°C non-condensing
Humidity range (storage)	< 90% RH @ 60°C non-condensing
Altitude	Operating and storage up to 3,048 m (10,000 ft)
Electrical:	
Power (input)	48 VDC nominal (37-57 VDC) 8 watts, 287 mA (AP)
Power sensing	Auto-sensing PoE, compliant with 802.3af and 802.3at (Type 1)
LED Indicators	Four LEDs for: • Power/Sync • Network • Radio activity • Future use
SMART HOPPING® radio:	
SMART HOPPING® antenna frequency range	2,400 – 2,483.5 MHz ISM band
Antenna type	SMART HOPPING® dual internal antennas
RF diversity	Uses two antennas and selects the antenna with the best signal
Frequency diversity	Dynamic, selects RF channels for best signals
Legacy mode (SMART HOPPING® 1.0):	
Channel spacing	1.728 MHz
Modulation	GFSK
Power output	• EU, Australia, New Zealand, Thailand, Philippines: 7.0 (±1.5) dBm • Japan: 8.5 (±1.5) dBm • Canada, US, Singapore, Hong Kong: 17.0 (±1.5) dBm
Antenna gain	4 dBi
Time slot types supported	Single or double/long
Total time slots available	32
Time slots allocated for wireless clients	18 14

Specification	Value
• Time slots allocated for roaming	
Advanced mode:	
Channel spacing	1.728 MHz
Modulation	PI/2-DBPSK, PI/4-DQPSK
Power output	• EU, Australia, New Zealand, Thailand, Philippines: 7.0 (±1.5) dBm • Japan: 8.5 (±1.5) dBm • Canada, US, Singapore, Hong Kong: 17.0 (±1.5) dBm **Note**: Peak envelope power
Antenna gain	4 dBi
Time slot types supported	Single
Total time slots available	32
Time slots allocated for wireless clients • No Remote Antennas connected	18
Time slots allocated for roaming	14
Electrical installation:	
Fire safety	SMART HOPPING® 2.0 AP are listed for use within 'Other Spaces Used for Environmental Air (Plenum)' per NFPA70: 2011, Article 300.22. **Note**: The term 'plenum' as used in Article 300.22 Section C correlates with the use of the term 'plenum' in NFPA 90A-2009, Standard for the Installation of Air-Conditioning and Ventilating Systems, and other mechanical codes where the plenum is used for return air purposes, as well as some other air-handling spaces. The area above dropped ceilings is an example of plenum space.
Interface connections:	
LAN input (Data): One-port ethernet 10/100 Base-T (100-Mbps connections must be full duplex)	RJ45 female socket **Note**: • SMART HOPPING® 1.0 APs require a 100 Mbps / full duplex switch port connection • SMART HOPPING® 2.0 APs require the switch port speed and duplex to be set to auto-negotiate
LAN cable to network Switch	CAT-5e (or higher) with a length of up to 100 m (328 ft.).

Table 3: SMART HOPPING® 2.0 Access Point specifications

2.5 Ordering information

Item	Part number	Contents
RTX3471 SH2.0 Access Point 2.4GHz	94100009	AP, wall anchors, #6 1.25-Inch self-tapping screws, mounting bracket, and grommets (2)

Table 4: SMART HOPPING® 2.0 Access Point part number and content

Mounting option	Part number
SH2.0 Frame rail[1]	94100012
SH2.0 Cosmetic ring	94100013
SH2.0 Cosmetic cover	94100014

Table 5: SMART HOPPING® 2.0 Access Point mounting accessories

2.6 Regulatory information

Regulatory compliance	Approval ID / Certificate number
Model no.	RTX3471
Part number	94100009
US	
FCC ID	T7H-RTX3471
Canada	
IC ID	4979B-RTX3471
Japan	
TELEC ID	T: D247014219 R: 19 – 247141
Thailand	
NBTC ID	SD05566-26
Philippines	
NTC ID	ESD-RCE-2648765
Hong Kong	
CA ID	CA0012600037
Singapore	
IMDA ID	DA102408

Table 6: Approval IDs

2.6.1 FCC compliance

This device complies with Parts 15 of the FCC rules. Operation is subject to the condition that this device does not cause harmful interference.

This equipment complies with the FCC RF radiation exposure limits set forth for an uncontrolled environment. This equipment should be installed and operated with a minimum distance of 20 cm between the radiator and any part of your body.

2.6.2 [Thailand] NBTC compliance

This telecommunication equipment conforms to the technical standards or requirements of NBTC.

Tested to comply with NBTC standards (National Broadcasting and Telecommunications Commission).

2.6.3 Symbol definitions

Table 7 illustrates and defines the symbols appearing on the SMART HOPPING® 2.0 AP hardware:

Symbol	Description
PHILIPS	Philips shield logo
	Legal manufacturer Information
PH YYYY-MM-DD	Country of manufacturer and date of manufacture
	Non-ionizing radiation
	Contains parts that you must not put into normal waste disposal but must be recycled or dealt with as chemical waste. Dispose of in accordance with the local country requirements
	Consult instructions for use
	See warnings in Table 8 below
SN	Serial number (PHYWWNNNNN)
MAC	AP MAC (Machine Access Code) address (MMMMMMMMMMMM)
BLE MAC	BLE Antenna MAC (Machine Access Code) address (MMMMMMMMMMMM)
Service #	Service number (94100009)
	Rated power input, DC (48 VDC)
10/100	10/100 Base-T RJ-45 LAN connection
LAN	Local Area Network Connection
	2D Bar code that includes the following: • Serial and service numbers • AP MAC • BLE MAC address

Symbol	Description
Tested To Comply With FCC Standards	**United States** Tested to comply with FCC standards
127796 c N us 62368-1	**United States and Canada** Tested to comply with applicable NRTL safety standards
	Australia and New Zealand Tested to comply with ACMA standards
T R	**Japan** Tested to comply with Japan TELEC standards
NTC Type Accepted No.: ESD-RCE-xx-xxxxx	**Philippines** Approved by the Philippine NTC (National Telecommunications Commission) and complies with applicable telecommunications and radio requirement.
Certified for use in Hong Kong 經驗證可在香港使用 Certificate No. 證書號碼 ZZZZZYYXXXXX 通訊事務管理局 COMMUNICATIONS AUTHORITY	**Hong Kong** Certified for use and complies with the relevant technical specifications prescribed by the Communications Authority (CA).
Complies with IMDA Standards DB123456	**Singapore** Complies with IMDA (Info-communications Media Development Authority) Standards.

Table 7: SMART HOPPING® 2.0 Access Point symbol definitions

2.6.3.1 Warnings

Please see table 8 below for product warnings:

	Warnings Consult the instructions for use. This product can expose you to chemicals including Lead and Lead Compounds, which are known to the State of California to cause cancer. For more information, go to www.P65Warnings.ca.gov. Disposables (product cannot be repaired): • Wash hands after use, wear gloves, where possible, and avoid food intake while handling the product. This device complies with part 15 of the FCC rules. Operation is subject to the following two conditions: • That this device may not cause harmful interference • This device must accept any interference received, including interference that may cause undesired operation.

Table 8: Product warnings

2.6.3.2 Certificate holder / Importer

Certificate holder / Importer is only mentioned in the list if required/relevant.

Country	Certificate holder / Importer
Singapore	Philips Electronics Singapore Pte Ltd. 622 Lorong 1 Toa Payoh, Singapore (319763)
Hong Kong	Philips Electronics Hong Kong Limited, Level 19, Tower I, Grand Century Place, 193 Prince Edward Road West, Mongkok, Kowloon, Hong Kong

3 Mount and install the SMART HOPPING® 2.0 Access Point

This section provides procedures on how to physically install the SMART HOPPING® 2.0 AP and includes:

- *Access Point placement guidelines* in 3.1
- *Mounting the SMART HOPPING® 2.0 Access Point to a wall* in 3.2
- *Mounting the SMART HOPPING® 2.0 Access Point to a wall (with cosmetic cover)* in 3.3
- *Flush ceiling mount (with cosmetic ring)* in 3.4
- *Mount below ceiling tile* in 3.5
- *Mount below ceiling tile (with cosmetic cover)* in 3.6
- *Mounting the SMART HOPPING® 2.0 Access Point with a tether mount (optional)* in 3.7
- *Installation procedure* in 3.8
- *Access Point startup sequence* in 3.9
- *Access Point configuration information* in 3.10

3.1 Access Point placement guidelines

Note the following important guidelines when locating SMART HOPPING® 2.0 APs:

- Consider building construction when placing APs to account for interference from ceramic wall tile, lead lined walls, elevator shafts, reinforced windows, and other obstacles which may cause signal degradation.
- Place APs in locations where there is no more than one wall between the AP and the coverage area.
- Ensure that the coverage area considers bathrooms, hallways, and windows.
- AP (internal) antennas must be more than 4 inches (10 cm) away from metal structures. If the antennas are too close to the structure, antenna performance can be degraded.
- APs shall not be placed closer than 3 feet (1 m) from other APs to prevent signal overload conditions.
- Each SMART HOPPING® 2.0 AP requires a 100 Mbps full duplex switch port connection.
- Try to avoid placing APs close to other electrical devices (exit lights, light fixtures, speakers, etc.). Devices like florescent light ballasts can create a significant amount of interference that can impact system performance.
- When installing a SMART HOPPING® network, RTX requires that the following LAN cables are STP cables:
    - Cables connecting the switch to the APCs
    - Cables connecting the switch to the Sync Units (that connects to the APs)

Warning Qualified personnel must mount APs and use certified conductors and follow national and local electrical codes.

All SMART HOPPING® devices are intended for indoor use only.

Caution Make sure you properly insulate (for example, use firestop discs) the AP and any openings around it when mounting an AP in an area with an air plenum.

Do not wall mount or flush mount an AP in an area containing an air plenum.

3.2 Mounting the SMART HOPPING® 2.0 Access Point to a wall

You can mount the SMART HOPPING® 2.0 AP to a wall using the mounting screws and screw anchors supplied with the AP. We recommend that you mount the AP high on the wall as close to the ceiling as possible. Table 9 below list the required parts to mount the SMART HOPPING® 2.0 AP to a wall:

Required parts		
Illustration	**Part name**	**Quantity**
94100009: SH2.0 Access Point 2.4GHz – includes the following:		1
	Access Point	1
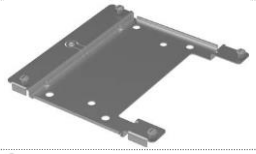	Mounting bracket	1
	Wall anchors	2
	#6 1.25-inch self-tapping screws	2
	Grommet (included with kit)	1

Table 9: Required wall mounting material

Required tools:

- Tape measure
- Level
- Hammer (when using wall anchors)
- Drill
- 7/32-inch drill bit
- 1-inch hole saw bit
- Philips head screwdriver
- Marker
- Silicone adhesive

3.2.1 Installation

Table 10 below shows step-by-step how to mount the SMART HOPPING® 2.0 AP to a wall.

Note To mount the AP to a wall, connector cables must come through the wall.

Step	Description	Illustration
1	Place the mounting bracket against the wall (as shown in the illustration). Use a marker on the two inner holes to mark the points that you want to drill holes for the screws that hold the mounting bracket to the wall. The holes ought to be level with the wall and approximately 100 mm apart (center of one hole to the center of the other hole). Put marker through the holes (see arrows) to mark points on the wall where you drill.	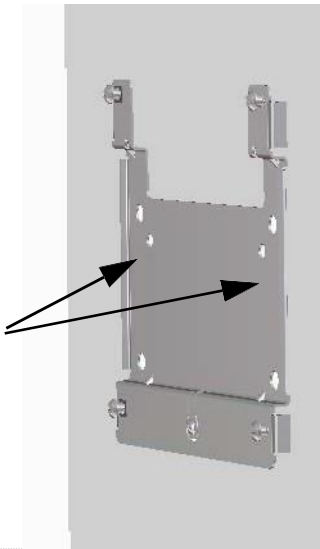
2	Using a 7/32-inch drill bit, drill the two pilot holes into the marks you drew in step 1. The holes ought to be level with the wall and approximately 100 mm apart (center of one hole to the center of the other hole).	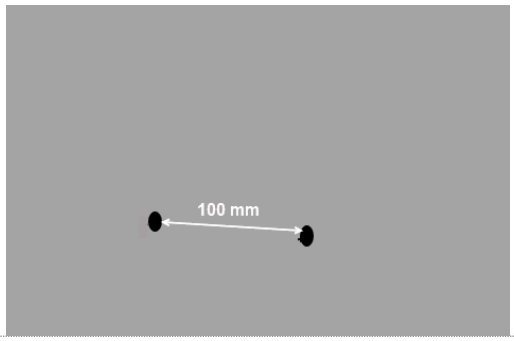
3	If the screw holes that you put in the wall do not go into building studs, use a hammer to tap a supplied screw anchor into each pilot hole until it is flush with the wall surface.	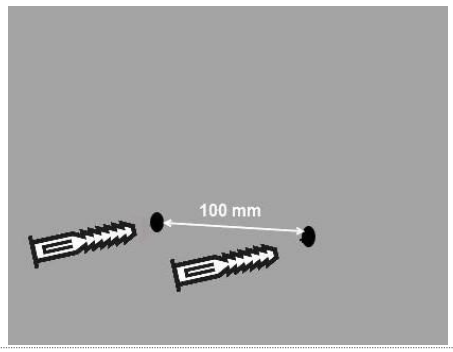

Step	Description	Illustration
4	Place the mounting bracket against the wall and line up the two holes.	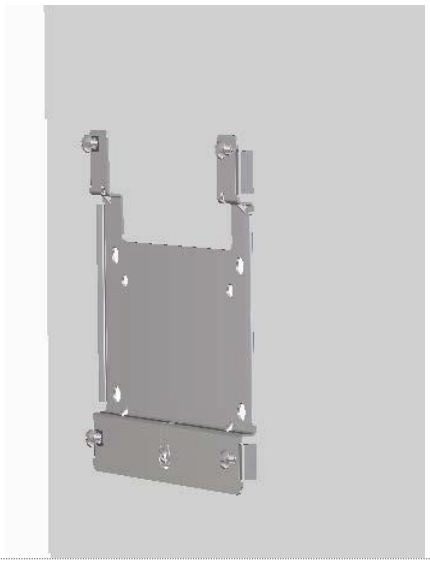
5	Screw a supplied #6 x 1 1/4-inch self-tapping screw through each hole in the mounting bracket and into each screw anchor (or pilot hole).	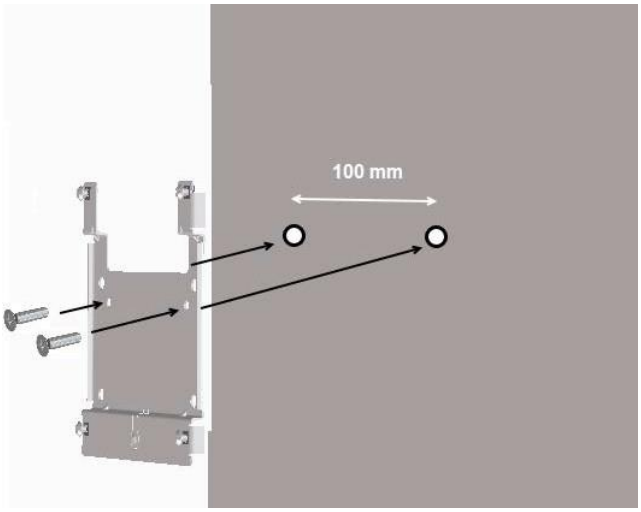
6	Mark one hole in the gap in the open space between the left and right sides of the mounting bracket (see illustration) to feed cables through the wall to the AP.	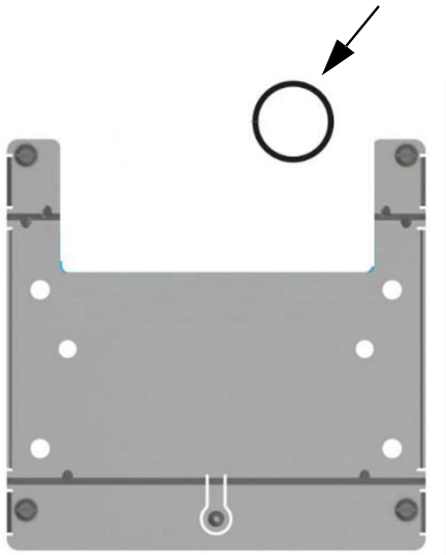

Step	Description	Illustration
7	Using a 1-inch hole saw, drill out a 1-inch hole around the mark. This is for LAN cable to come out of the wall and attach to the AP. On the finished side of the wall, secure the 1-inch grommet to the 1-inch hole you drilled. You need adhesive to secure the grommet to the wall.	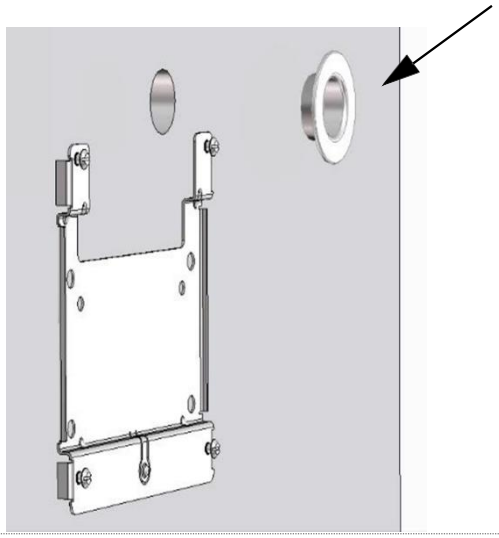
8	Pull the LAN cable out of the wall (through the grommet). Connect the cable to the AP LAN RJ-45 port. This provides power to the AP and lights up the LEDs on the front of the AP (if other end of the ethernet cable is connected to a powered Sync Unit).	
9	While holding the AP, fit the four keyholes in the back of the AP chassis over the four keyhole screw heads that protrude from the mounting bracket. Slide the AP down so that all four screw heads are securely in the slots of the keyholes in the back of the AP chassis. When the AP is securely placed in the mounting bracket, you hear a 'click' sound.	

Table 10: Step-by-step guide - how to mount Access Point to a wall

3.3 Mounting the SMART HOPPING® 2.0 Access Point to a wall (with cosmetic cover)

You can mount the SMART HOPPING® 2.0 AP to a wall using the mounting screws and screw anchors supplied with the AP. We recommend that you mount the AP high on the wall as close to the ceiling as possible.

Table 11 below list the required parts to mount the SMART HOPPING® 2.0 AP with the cosmetic cover to a wall:

Required parts		
Illustration	**Part name**	**Quantity**
94100009: SH2.0 Access Point 2.4GHz – includes the following:		1
	Access Point	1
	Mounting bracket	1
	Wall anchors	2
	#6 1.25-Inch self-tapping screws	2
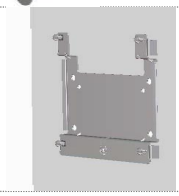	Grommet (included with kit)	1
94100014: SH2.0 Cosmetic cover – includes the following:		
	Cosmetic cover	1
	M3 x 0.5 x8 machine screws	2

Table 11: Required wall mounting material

Required tools:

- Tape measure
- Level
- Hammer (when using wall anchors)
- Drill
- 7/32-inch drill bit
- 1-inch hole saw bit
- Philips head screwdriver
- T-8 torx driver
- Silicone adhesive
- Marker

3.3.1 Installation

Table 12 below shows step-by-step how to mount the SMART HOPPING® 2.0 AP with cosmetic cover to a wall.

Note To mount the AP to a wall, connector cables must come through the wall.

Step	Description	Illustration
1	Place the mounting bracket against the wall (as shown in the illustration). Use a marker on the two inner holes to mark the points that you want to drill holes for the screws that hold the mounting bracket to the wall. The holes ought to be level with the wall and approximately 100 mm apart (center of one hole to the center of the other hole). Put marker through the holes (see arrows) to mark points on the wall where you drill.	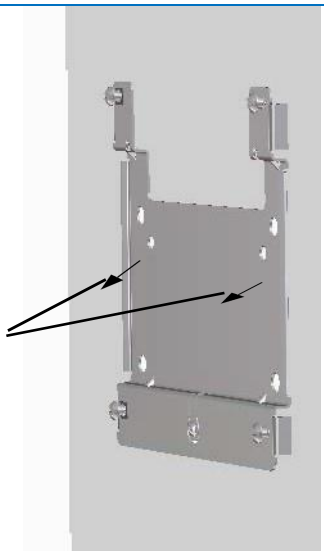
2	Using a 7/32-inch drill bit, drill the two pilot holes into the marks you drew in step 1. The holes ought to be level with the wall and approximately 100 mm apart (center of one hole to the center of the other hole).	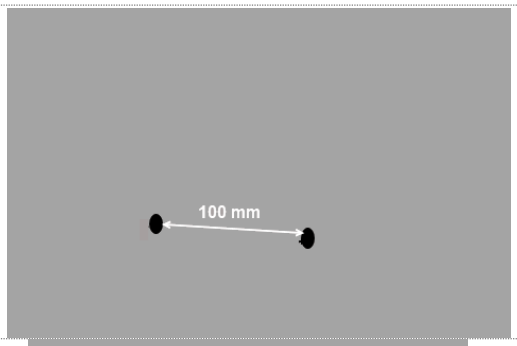
3	If the screw holes that you put in the wall do not go into building studs, use a hammer to tap a supplied screw anchor into each pilot hole until it is flush with the wall surface.	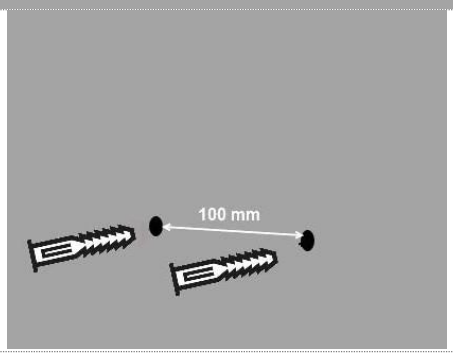

Step	Description	Illustration
4	Place the mounting bracket against the wall and line up the two holes.	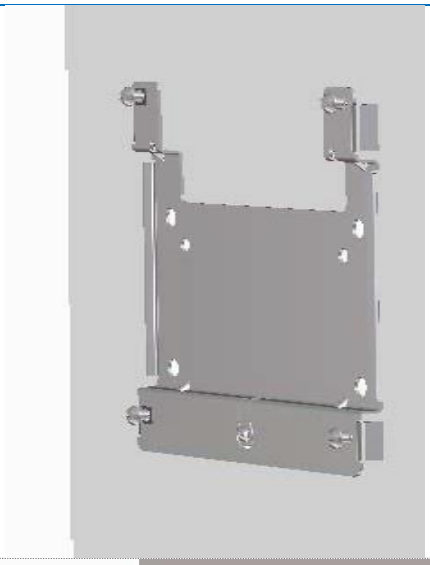
5	Screw a supplied #6 x 1 1/4-inch self-tapping screw through each hole in the mounting bracket and into each screw anchor (or pilot hole).	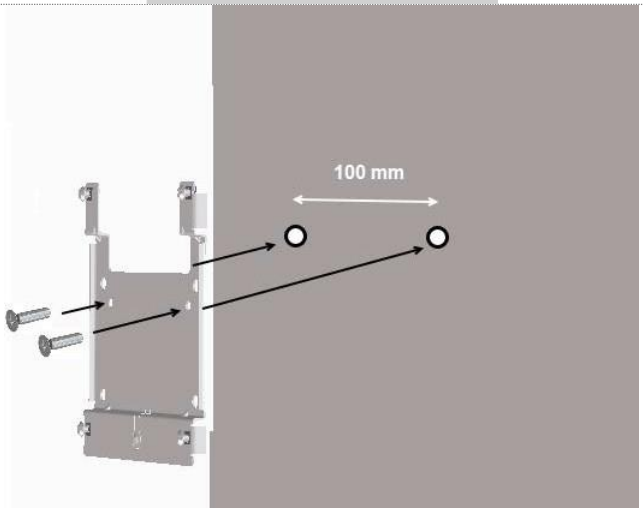
6	Mark one hole in the gap in the open space between the left and right sides of the mounting bracket (see illustration) to feed the LAN cable through the wall to the AP.	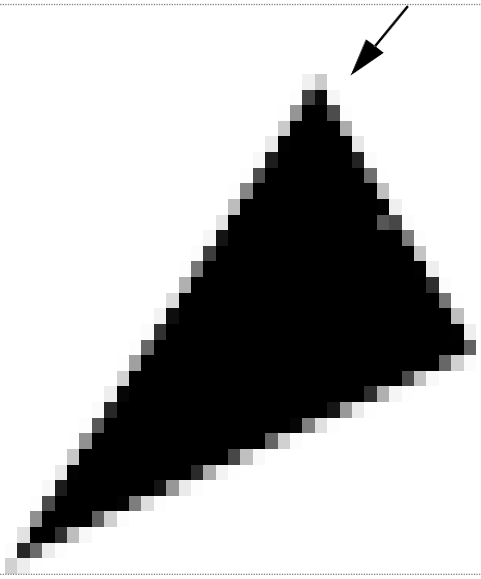

Step	Description	Illustration
7	Using a 1-inch hole saw, drill out a 1-inch hole around the mark. This is for the LAN cable to come out of the wall and attach to the AP. On the finished side of the wall, secure the 1-inch grommet to the 1-inch hole you drilled. You need adhesive to secure the grommet to the wall.	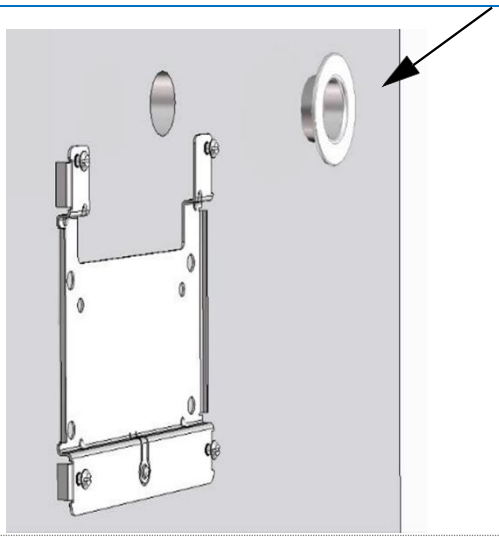
8	Attach the AP to the cosmetic cover using the two M3 x 0.5 x8 screws. Place the AP face down. Place the cosmetic cover over the AP. Make sure the two holes in the cosmetic cover align with the corresponding holes in the AP. Secure the AP to the cosmetic cover by screwing in the two M3 x 0.5 x 8 machine screws into the holes in the cosmetic ring and into the AP.	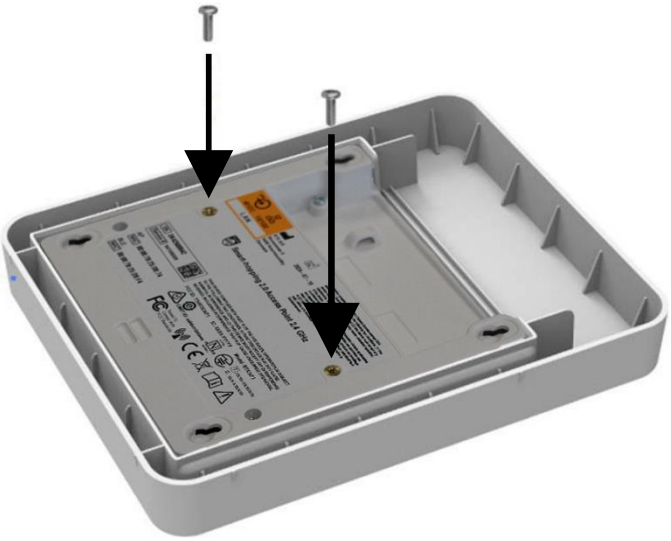
9	Pull the LAN cable out of the wall (through the grommet). Connect the cable to the AP LAN RJ-45 port. This provides power to the AP and lights up the LEDs on the front of the AP (if other end of the ethernet cable is connected to a powered Sync Unit).	

Step	Description	Illustration
10	While holding the AP, fit the four keyholes in the back of the AP chassis over the four keyhole screw heads that protrude from the mounting bracket. Slide the AP down so that all four screw heads are securely in the slots of the keyholes in the back of the AP chassis. When the AP is securely placed in the mounting bracket, you hear a 'click' sound.	

Table 12: Step-by-step guide - how to mount Access Point with cosmetic cover to a wall

3.4 Flush ceiling mount (with cosmetic ring)

You can mount the SMART HOPPING® 2.0 AP on a ceiling tile and make the AP flush with the tile (the AP protrudes 7-10 mm from the finished side of the tile). To mount the AP with cosmetic ring to a tile, please see the list of the required parts in table 13 below.

Note Wall anchors, grommet, and #6 1.25-inch self-tapping screws are included with the AP. We do not use them in this mounting method.

3.4.1 Required materials

Required parts		
Illustration	**Part name**	**Quantity**
94100009: SH2.0 Access Point 2.4GHz – includes the following:		1
	Access Point	1
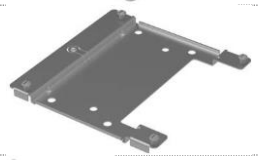	Mounting bracket	1
	Wall anchors	2
	#6 1.25-inch self-tapping screws	2
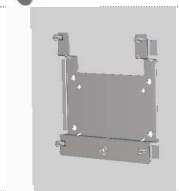	Grommet (included with kit)	1
94100012: SH2.0 Frame rail[1] - includes the following:		1
	Mounting rail	1
	M6 push nut	4
	M6 x 1 nut	4
	Adapter plates	2
94100013: SH2.0 Cosmetic ring - includes the following:		1
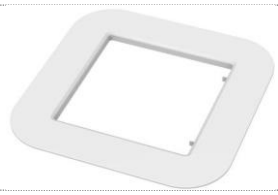	Cosmetic ring	1

Table 13: Required parts for flush mounting with cosmetic ring

Required tools:

- Tape measure
- Pliers (or wrench)
- Utility knife
- Marker

3.4.2 Assemble the Access Point, adapter plates, mounting bracket, and cosmetic ring

Table 14 below shows step-by-step how to flush ceiling mount the SMART HOPPING® 2.0 AP with cosmetic ring.

Step	Description	Illustration
1	Perform these steps to connect both adapter plates to the mounting bracket: Orient the adapter plate so the bolt heads are on the same surface as the four keyhole screw heads that are attached to the mounting bracket. Place the bolts through one set of outer holes on the bracket.	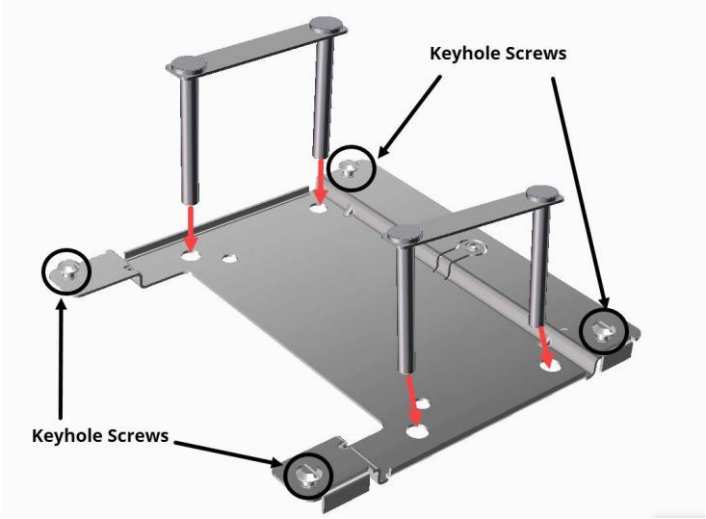 Slide through holes

Step	Description	Illustration
2	Align the side of the mounting bracket with the rectangular cutout with the connector on the back of the AP. Fit the four keyhole screw heads on the mounting bracket into the four keyholes on the back of the AP. Slide the mounting bracket toward the connectors on the AP. You hear a 'click' sound when the bracket is securely attached to the AP.	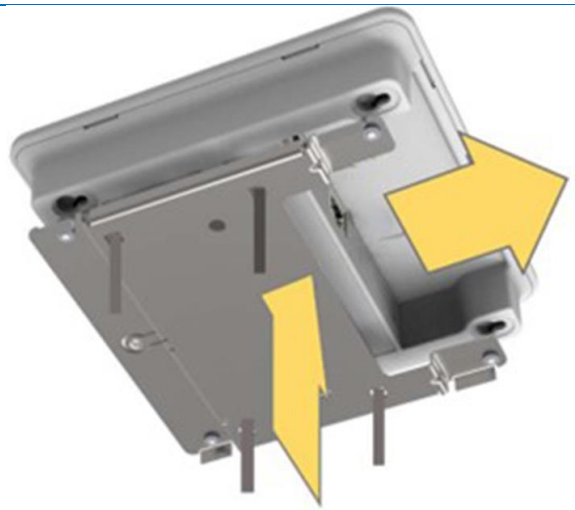
3	Place the AP assembly, finished side down, on a flat surface. Place the cosmetic ring over the AP assembly.	

Step	Description	Illustration
4	Prepare and mount the AP to the ceiling tile. Get the tile which you wish to mount the AP on. Place the mounting rail on the finished side of the tile. Align the center of the mounting rail with the center of the tile. Using the rail as a template, measure the tile and mark an X on the top edge of the tile. This ensures that the mounting rail faces the correct direction when you flip the tile to mount the mounting rail on its unfinished side (in a later step). Make sure the side of the mounting rail labeled (**Cable Access** / **Flush Mount**) faces you. Place four marks on the inner edge of the tile at the points where the arrows of the markings on the mounting rail end. **<--Flush Mount Cutout-->**	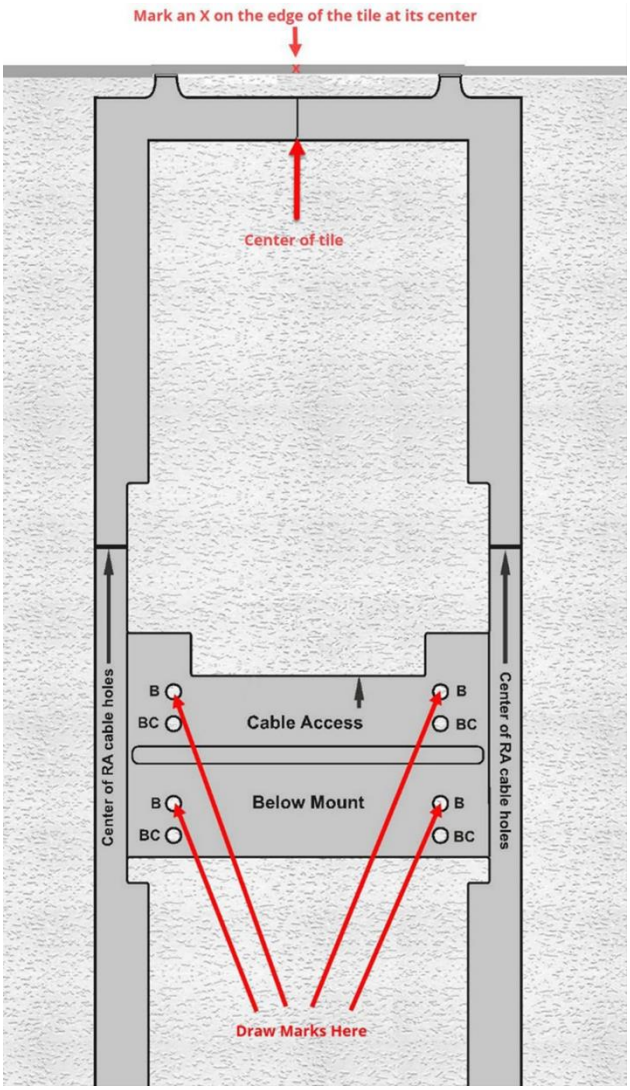
5	Remove the mounting rail from the ceiling tile and draw lines to create a rectangle. Using a utility knife, cut out the rectangle. This is where you recess the AP. Put the tile and mounting rail aside.	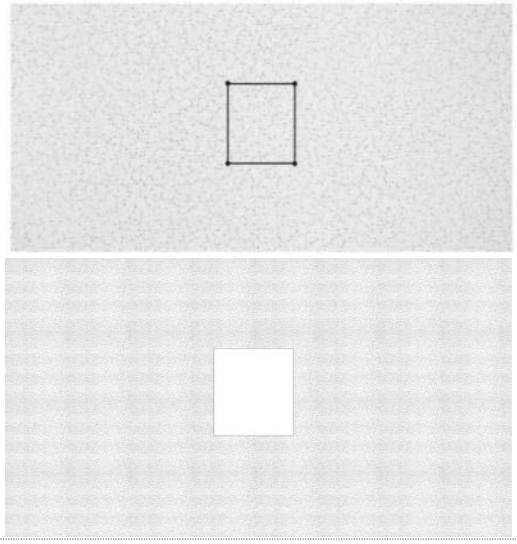

Step	Description	Illustration
6	Get the ceiling tile in which you cut the hole (from the previous steps). Place the tile, with the unfinished side facing you, over the AP and cosmetic cover. Make sure the AP is aligned along the bottom edge of the rectangular cutout in the tile (the bottom edge of cutout refers to the edge furthest away from the mark you made on the tile when preparing the tile). This leaves space for the minimum bending radius of the cables.	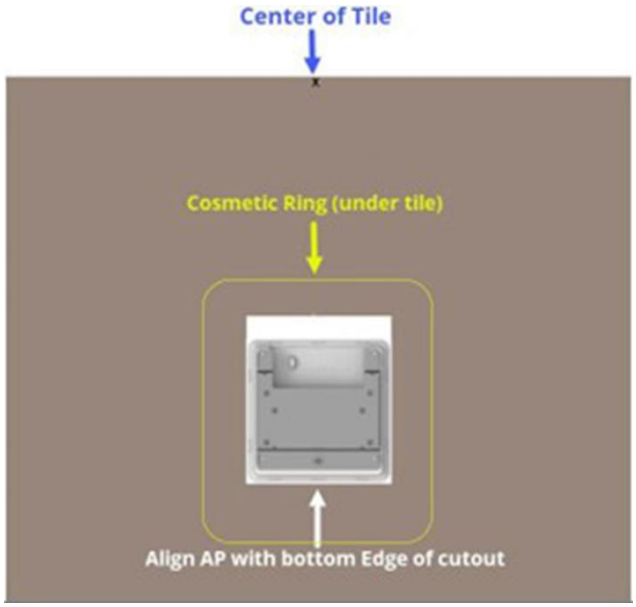
7	Place the mounting rail over the AP assembly, on top of the unfinished side of the ceiling tile. Make sure the **Cable Access** / **Flush Mount** label on the mounting rail faces you and the label points toward the AP connectors. Feed the four bolts through the holes marked **F**. The **Flush Mount Cutout** arrows must align with the rectangular cutout in the tile.	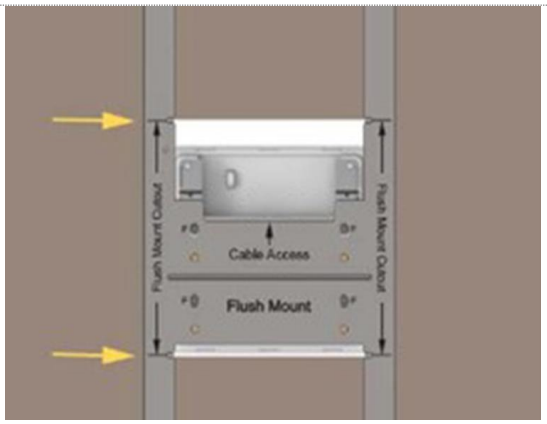
8	Secure the AP assembly and mounting rail to the ceiling tile: Place an M6 x 1 nut on each of the bolts from the adapter plate that stick through the holes in the mounting rail. Tighten the nuts enough to secure the adapter plates flat and tight against the tile, and not over tighten the nuts, which may break the tile.	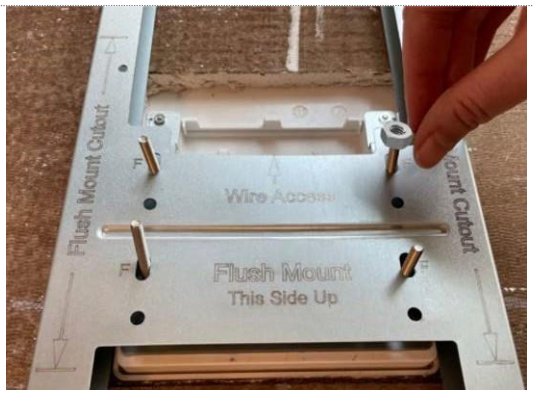

Step	Description	Illustration
9	To secure the nuts, place a push nut over each of the bolts and push down until it sits on top of each nut. You can do this by hand or use a tool, such as pliers or an open-ended wrench.	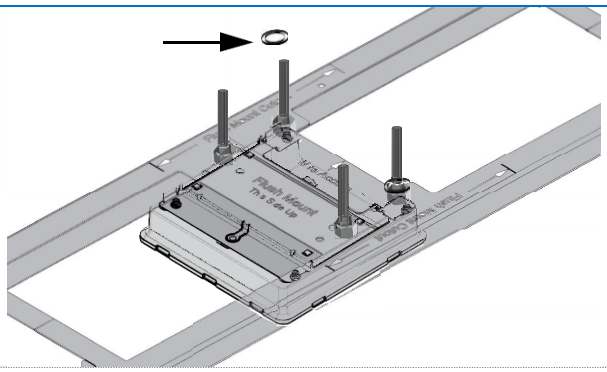
10	Connect the LAN cable to the AP LAN RJ-45 port. This provides power to the AP and lights up the LEDs on the front of the AP (if other end of the ethernet cable is connected to a powered Sync Unit).	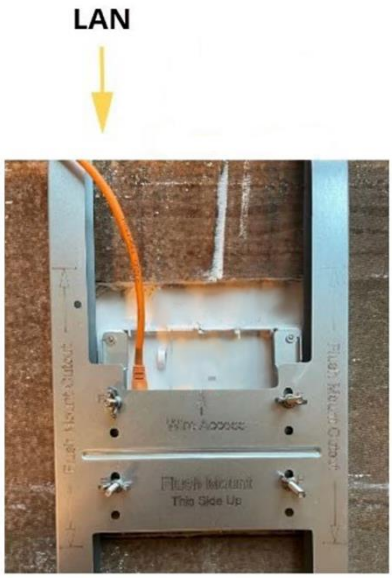
11	Place the tile into the ceiling. Replace other adjacent tiles, if necessary.	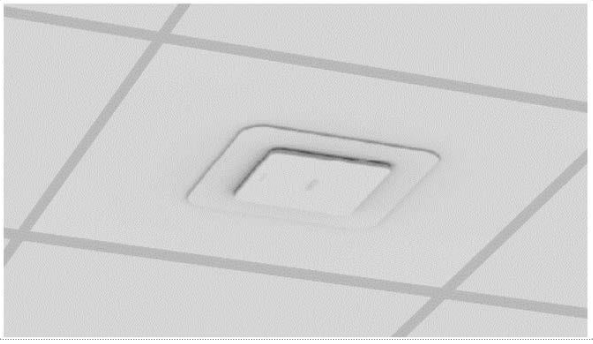

Table 14: Step-by-step guide - flush ceiling mount with cosmetic ring

3.5 Mount below ceiling tile

You can mount the SMART HOPPING® 2.0 AP below a ceiling tile - please see the required parts in table 15 below.

Note Wall anchors and #6 1.25-inch self-tapping screws are included with the AP. This mounting method does not use the screws or wall anchors.

Required parts		
Illustration	**Part name**	**Quantity**
94100009: SH2.0 Access Point 2.4GHz – includes the following:		1
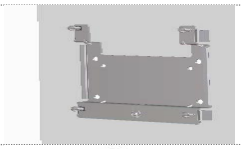	Access Point	1
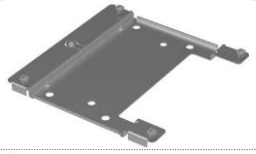	Mounting bracket	1
	Wall anchors	2
	#6 1.25-inch self-tapping screws	2
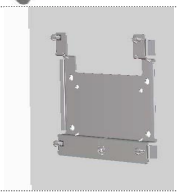	Grommet (included with kit)	1
94100012: SH2.0 Frame rail[1] - includes the following:		1
	Mounting rail	1
	M6 push nut	4
	M6 x 1 nut	4
	Adapter plates	2

Table 15: Required parts to mount below ceiling tile

Required tools:

- Tape measure
- Drill
- 1/4-inch drill bit
- 1-inch hole saw bit
- Pliers (or wrench)
- Marker

3.5.1 Assemble the Access Point, adapter plates, and mounting bracket

Step	Description	Illustration
1	Perform these steps to connect both adapter plates to the mounting bracket: Orient the adapter plate so the bolt heads are on the same surface as the four keyhole screw heads that are attached to the mounting bracket. Place the bolts through one set of outer holes on the bracket.	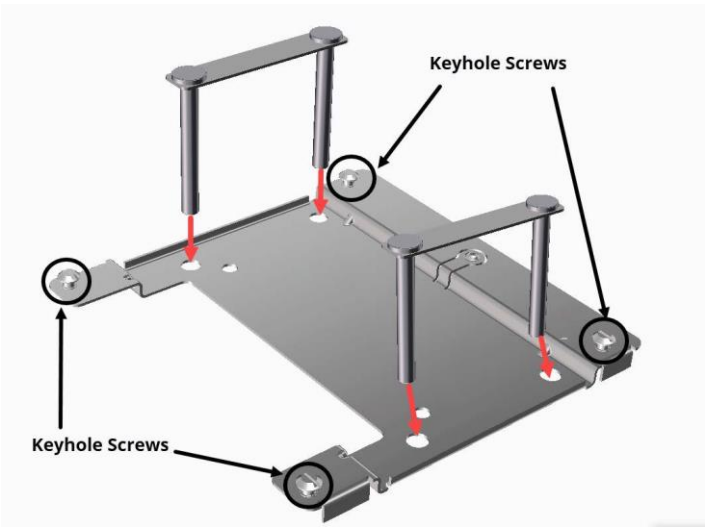 Slide through holes

Step	Description	Illustration
2	Align the side of the mounting bracket with the rectangular cutout with the connectors on the back of the AP. Fit the four keyhole screw heads on the mounting bracket into the four keyholes on the back of the AP. Slide the mounting bracket toward the connectors on the AP. You hear a 'click' sound when the bracket is securely attached to the AP.	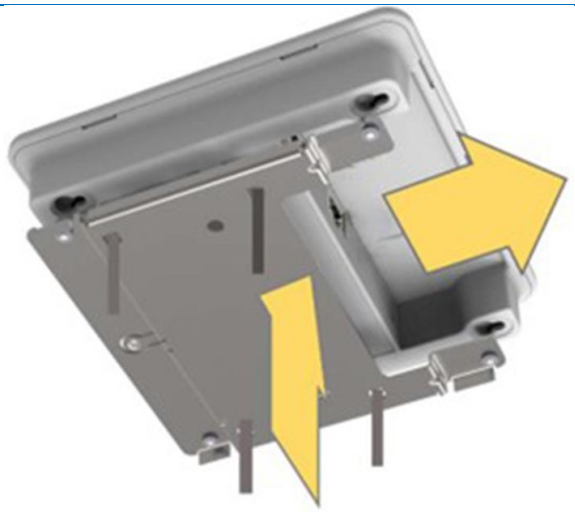
3	Prepare and mount the AP to the ceiling tile. Get the tile which you wish to mount the AP on. Place the mounting rail on the finished side of the tile. Align the center of the mounting rail with the center of the tile. Using the rail as a template, measure the tile and mark an X on the top edge of the tile. Make sure the side of the mounting rail labeled (**Cable Access** / **Flush Mount**) faces you. Measure the tile and mark the middle points on the edge of the long side of the tile. Place marks on the tile in the holes labeled **B** on the mounting rail. Place a mark on the tile above the **Cable Access** arrow, 1 inch above the edge of the mounting rail.	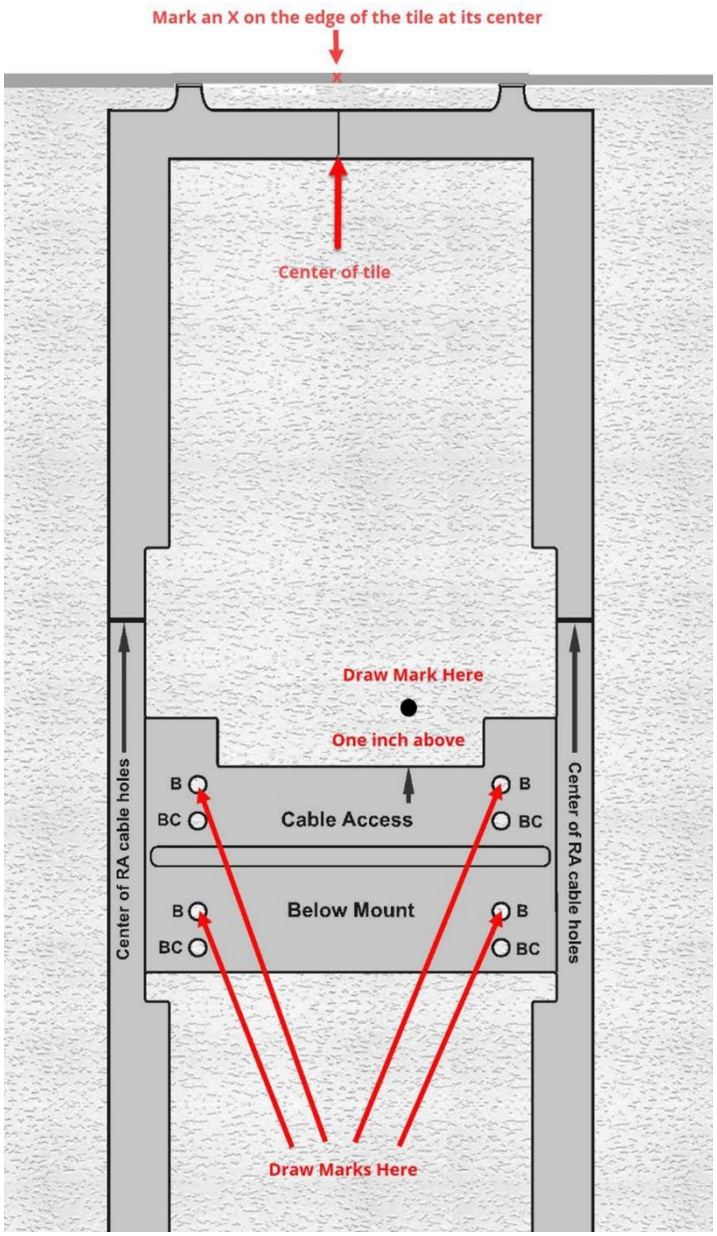

Step	Description	Illustration
4	Remove the mounting rail. With the finished side of the ceiling tile facing you, use the drill and 1/4-inch drill bit to drill four holes where you marked in the **B** holes in the previous steps. Using the marks, you made in step 3 as the center point, use a 1-inch hole saw to drill out a 1-inch hole in the tile. This hole is to pass the ethernet/LAN cable through the ceiling to the AP.	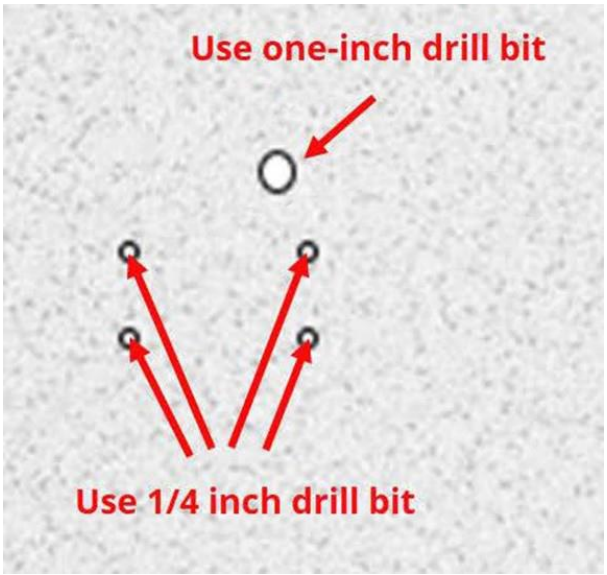
5	Lightly coat the inner ring (where the grommet touches the ceiling tile) of both grommets with silicone adhesive. Coat all of the area (see yellow arrow) of the grommet with silicone adhesive.	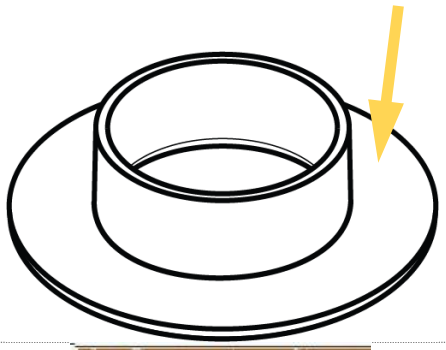
6	Insert the grommets into the 1-inch hole in the ceiling tile (insert the grommet from the unfinished side of the tile).	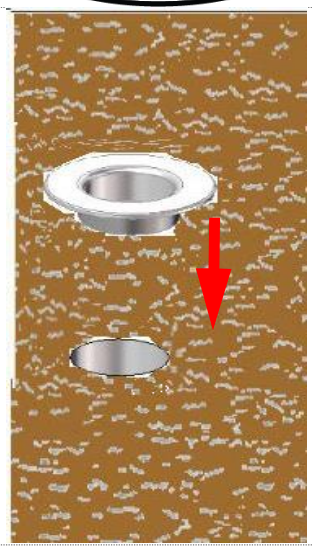

Step	Description	Illustration
7	Place the mounting rail on the unfinished side of the ceiling tile. Make sure the **Cable Access** arrow on the mounting rail is pointed towards the 1-inch hole you drilled for the cables. The four 1/4-inch hole you drilled must align with the **B** holes in the mounting rail.	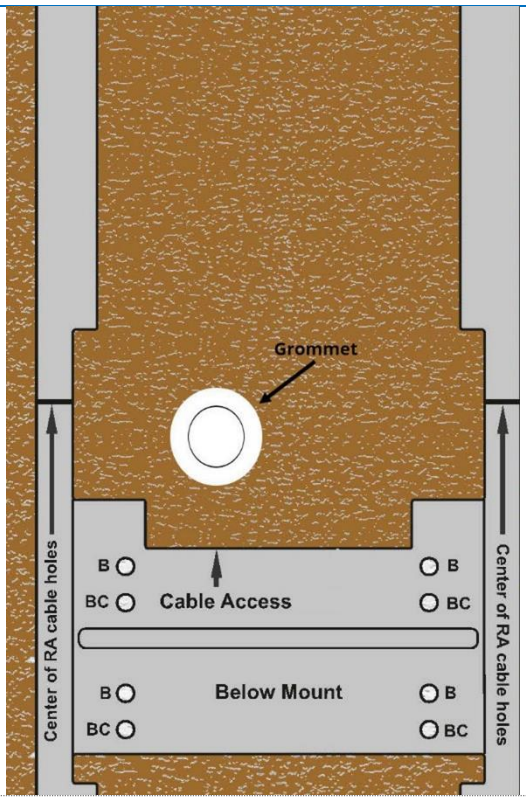
8	Connect the mounting bracket and the mounting rail to the ceiling tile: Pick up the mounting bracket and orient it so that the rectangular cutout on the bracket is in the same direction as the **Cable Access** arrows on the mounting rail. With the adapter plates adhered to the mounting bracket, insert the four bolts from the finished side of the tile through the four 1/4-inch holes in the tile and through the **B** holes in the mounting rail.	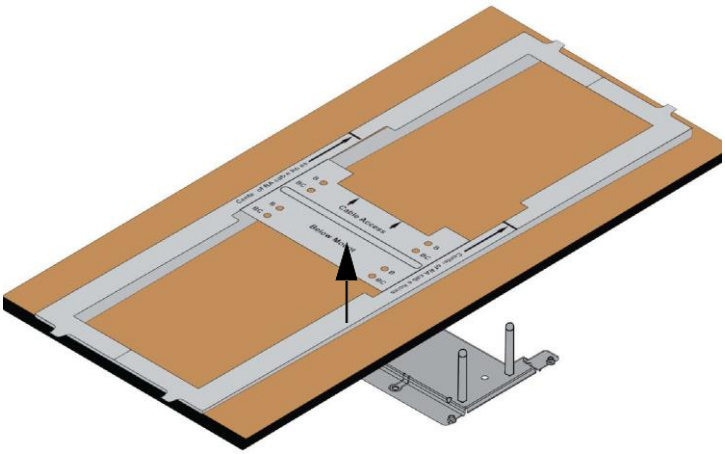
9	Secure the AP assembly and mounting rail to the ceiling tile: Place an M6 x 1 nut on each of the bolts from the adapter plate that stick through the holes in the mounting rail. Tighten the nuts enough to secure the adapter plates flat and tight against the tile, and not over tighten the nuts, which may break the tile.	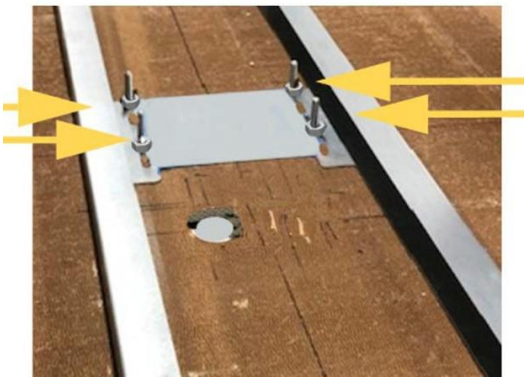

Step	Description	Illustration
10	To secure the nuts, place a push nut over each of the bolts and push down until it sits on top of each nut. You can do this by hand or use a tool, such as pliers or an open-ended wrench.	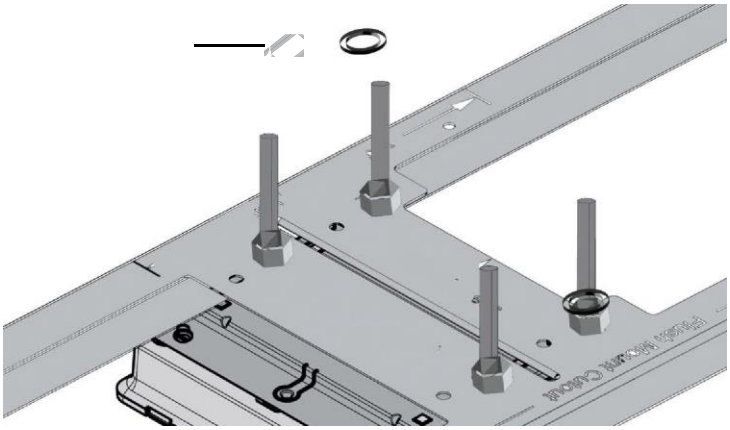
11	Feed the LAN cable from the ceiling through the hole on the inside edge of the ceiling tile. Connect the cable to the AP LAN RJ-45 port. This provides power to the AP and lights up the LEDs on the front of the AP (if other end of the ethernet cable is connected to a powered Sync Unit).	
12	With the LAN cable now connected, place the tile into the ceiling. **Note**: You can now remove and reattach the AP without removing the tile by sliding the AP horizontally in the opposite direction of the LEDs. Reattach the AP by inserting the four small shoulder screws on the mounting bracket into the keyholes on the AP and sliding the AP toward the LEDs. You hear a click noise when the AP is secured to the mounting bracket. Replace other adjacent ceiling tiles, if necessary.	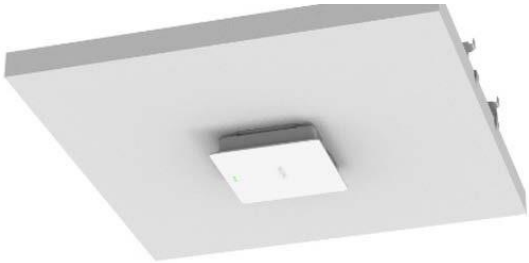

Table 16: Step-by-step guide - how to mount the Access Point below ceiling tile

3.6 Mount below ceiling tile (with cosmetic cover)

You can mount the SMART HOPPING® 2.0 AP below a ceiling tile and place a cosmetic cover around the AP to hide exposed cables - please see the list of the required parts in table 17 below.

Note Wall anchors and #6 1.25-inch self-tapping screws are included with the AP. These are not used in this mounting method.

Required parts		
Illustration	**Part name**	**Quantity**
94100009: SH2.0 Access Point 2.4GHz – includes the following:		1
	Access Point	1
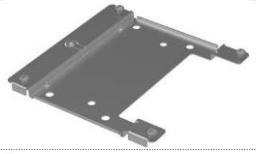	Mounting bracket	1
	Wall anchors	2
	#6 1.25-inch self-tapping screws	2
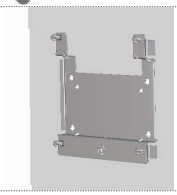	Grommet (included with kit)	1
94100012: SH2.0 Frame rail[1] - includes the following:		1
	Mounting rail	1
	M6 push nut	4
	M6 x 1 nut	4
	Adapter plates	2
94100014: SH2.0 Cosmetic cover - includes the following:		1
	Cosmetic cover	1
	M3 x 0.5 x8 machine screws	2

Table 17: Required parts to mount below ceiling tile with cosmetic cover

Required tools:

- Tape measure
- Drill
- 1/4-inch drill bit
- 1-inch hole saw bit
- Pliers (or wrench)
- Philips head screwdriver
- T-8 torx driver
- Silicone adhesive
- Marker

3.6.1 Mount the cosmetic cover and attach the adapter plates to the mounting bracket

Table 18 below shows step-by-step how to mount the SMART HOPPING® 2.0 AP with cosmetic cover below a ceiling tile.

Step	Description	Illustration
1	Attach the AP to the cosmetic cover using the two M3 x 0.5 x8 screws. Place the AP face down. Place the cosmetic cover over the AP. Make sure the two holes in the cosmetic cover align with the corresponding holes in the AP. Secure the AP to the cosmetic cover by screwing in the two M3 x 0.5 x8 machine screws into the holes in the cosmetic cover and into the AP.	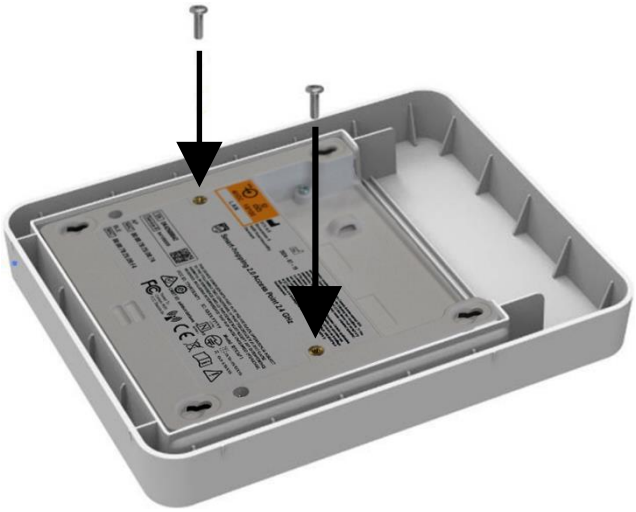

Step	Description	Illustration
2	Perform these steps to connect both adapter plates to the mounting bracket: Orient the adapter plate so the bolt heads are on the same surface as the four keyhole screw heads that are attached to the mounting bracket. Place the bolts through one set of outer holes on the bracket.	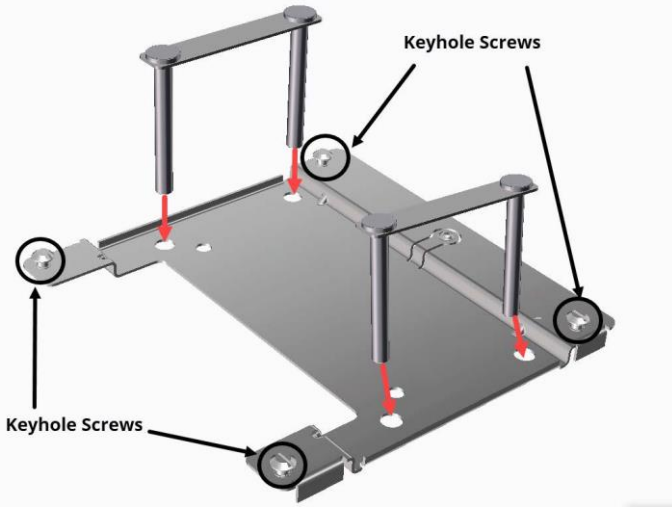 Slide through holes
3	Align the side of the mounting bracket with the rectangular cutout with the connectors on the back of the AP. Fit the four keyhole screw heads on the mounting bracket into the four keyholes on the back of the AP. Slide the mounting bracket toward the connectors on the AP. You hear a 'click' sound when the bracket is securely attached to the AP.	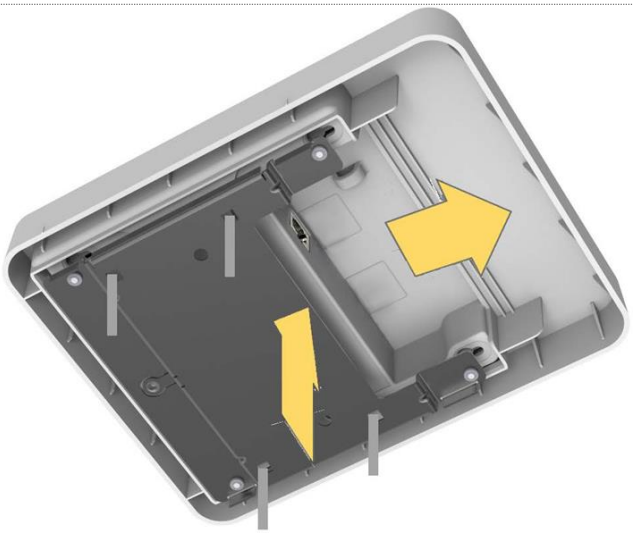

Step	Description	Illustration
4	Select the ceiling tile which you wish to mount the AP on. Place the mounting rail on the finished side of the tile. Align the center of the mounting rail with the center of the tile. Using the rail as a template, measure the tile and mark an X on the top edge of the tile. Make sure the side of the mounting rail labeled: **Cable Access** **Below Mount** faces you. Place marks on the tile in the holes labeled **BC** on the mounting rail. Place a mark on the tile above the **Cable Access** arrow, 1 inch above the edge of the mounting rail.	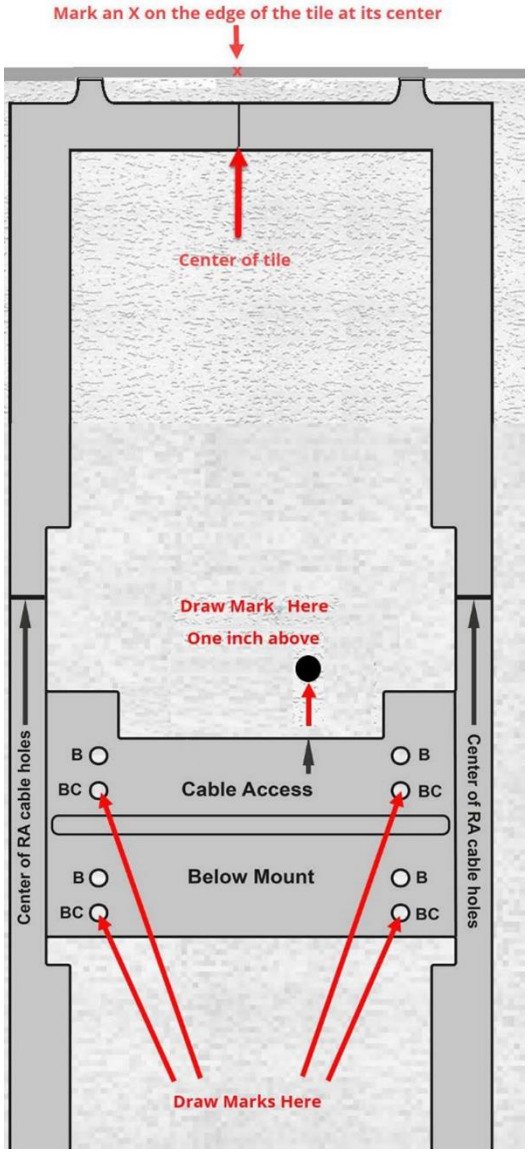
5	Remove the mounting rail. With the finished side of the ceiling tile facing you, use the drill and 1/4-inch drill bit to drill four holes where you marked in the **BC** holes in the previous steps. Using the mark, you made in step 4 as the center point, use a 1-inch hole saw to drill out a 1-inch hole in the tile. This hole is to pass the LAN cable through the ceiling to the AP.	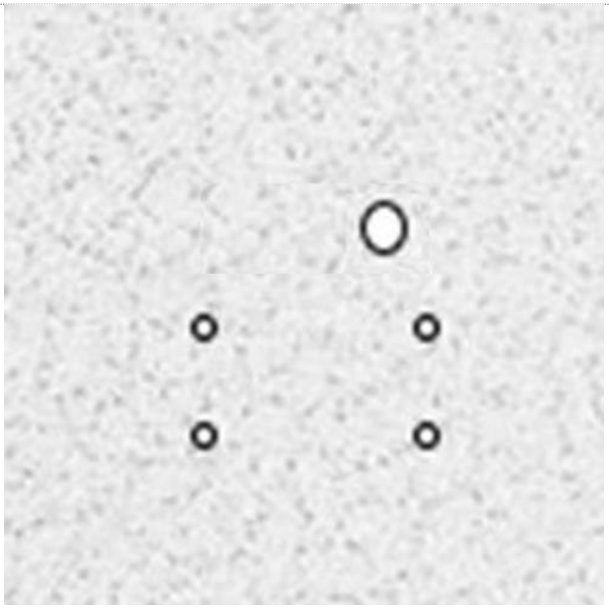

Step	Description	Illustration
6	Lightly coat the inner ring (where the grommet touches the ceiling tile) of both grommets with silicone adhesive. Coat all of the area (see yellow arrow) of the grommet with silicone adhesive.	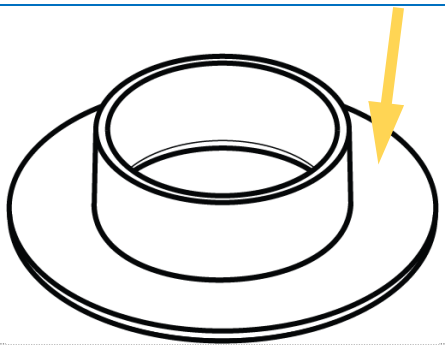
7	Insert the grommet into the 1-inch hole in the ceiling tile (insert the grommet from the unfinished side of the tile).	
8	Place the ceiling tile on a flat surface with the unfinished side of the tile facing you. Place the mounting rail on the unfinished side of the tile. Make sure the **Cable Access** arrow on the mounting rail is pointed towards the 1-inch hole you drilled for the cable. The four 1/4-inch holes you drilled must align with the **BC** holes in the mounting rail.	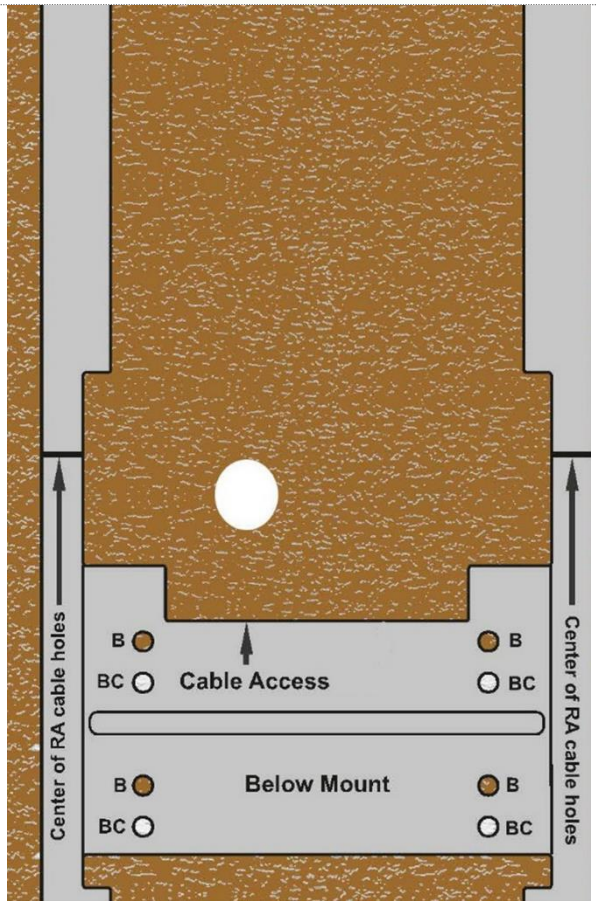

Step	Description	Illustration
9	Connect the mounting bracket and the mounting rail to the ceiling tile: Pick up the mounting bracket and orient it so that the rectangular cutout on the bracket is in the same direction as the **Cable Access** arrows on the mounting rail. With the adapter plates adhered to the mounting bracket, insert the four bolts from the finished side of the tile through the four 1/4-inch holes in the tile and through the **B** holes in the mounting rail.	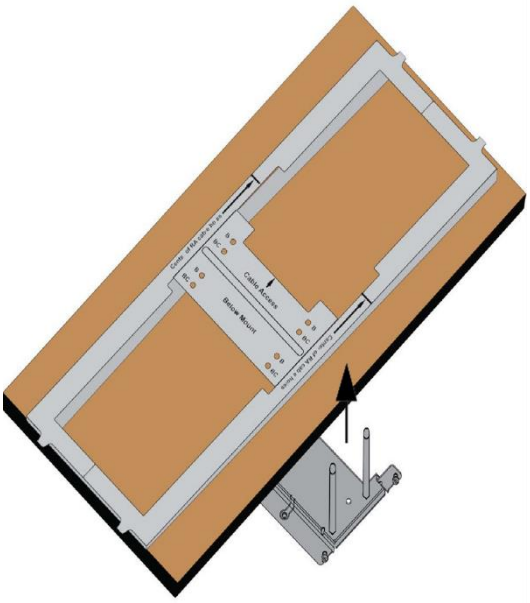
10	Secure the AP assembly and mounting rail to the ceiling tile: Place an M6 x 1 nut on each of the bolts from the adapter plate that stick through the holes in the mounting rail. Tighten the nuts enough to secure the adapter plates flat and tight against the tile, and not over tighten the nuts, which may break the tile.	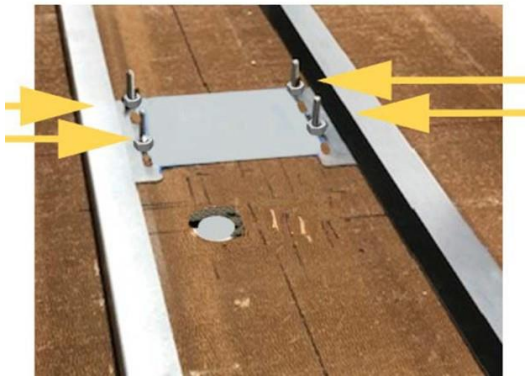
11	To secure the nuts, place a push nut over each of the bolts and push down until it sits on top of each nut. You can do this by hand or use a tool, such as pliers or an open-ended wrench.	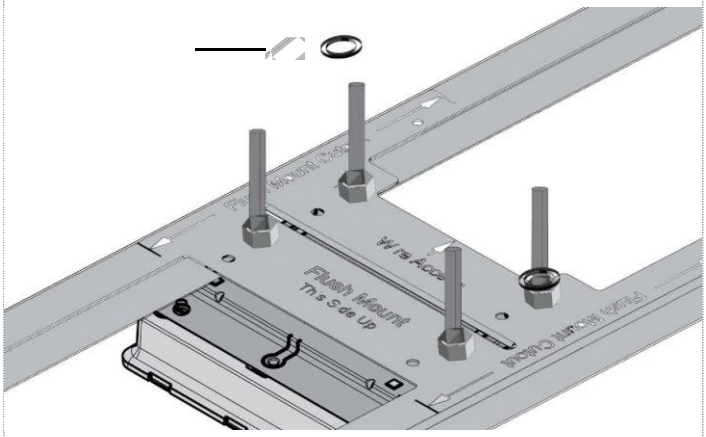

Step	Description	Illustration
12	Pull the LAN cable through the 1-inch hole on the unfinished side of the ceiling tile so the cable connector end up on the finished side of the tile. Connect the LAN cable to the AP LAN RJ-45 port. This provides power to the AP and lights up the LEDs on the front of the AP (if other end of the ethernet cable is connected to a powered Sync Unit).	
13	With the cable connected, place the tile into the ceiling. Replace other adjacent tiles, if necessary. **Note**: You can now remove and reattach the AP with cosmetic cover without removing the tile by sliding the AP with cosmetic cover horizontally in the opposite direction of the LEDs. Reattach the AP with cosmetic cover by inserting the four small shoulder screws on the mounting bracket into the keyholes on the AP and sliding the AP with cosmetic cover toward the LEDs. You hear a 'click' noise when the AP is secured to the mounting bracket.	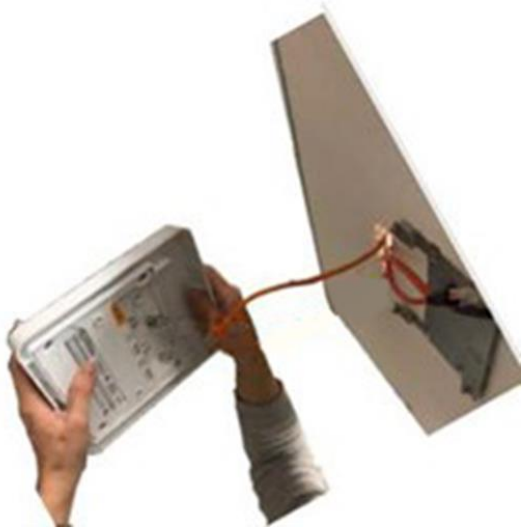

Table 18: Step-by-step guide - how to mount Access Point with cosmetic cover below ceiling tile

3.7 Mounting the SMART HOPPING® 2.0 Access Point with a tether mount (optional)

In addition to (not as a substitute for) any of the other installation options described in this section, you can add a tether from the tether point on the AP to a permanent building structure for extra security (where local building codes require this type of installation [such as earthquake-prone areas]).

Note You must connect the other end of the tether to a stable part of the building frame.

Perform these steps outlined in the below table before replacing the ceiling tile onto the ceiling frame structure, or prior to attaching the AP to a wall:

There is a tether point on the AP housing to allow for tethering to other permanent structures. Use an 18-gauge galvanized steel wire. Make sure the tether wire complies with national and local building standards. Thread the wire through the tether point in the AP housing. The tether wire must have three tight turns of the wire within 1.5 inches of the end of the wire. Connect the other end of the tether wire to a permanent structure within the ceiling. The tether wire may be attached to any of the following: • Wood or metal stud framing • Blocking attached to wood or metal framing • Plywood adequately attached to wood or metal stud framing, reinforced concrete, or reinforced masonry • Reinforced concrete • Reinforced masonry	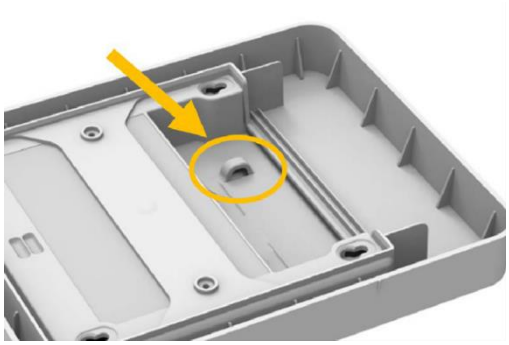

3.8 Installation procedure

To install the SMART HOPPING® 2.0 AP:

- Mount the AP where they can communicate with patient monitor devices. Note these guidelines when installing the SMART HOPPING® 2.0 AP:
  - You may mount each SMART HOPPING® 2.0 AP as follows:
    - To a wall, as described in subsection 3.2 and in subsection 3.3
    - Below a ceiling (flush mount) as described in subsection 3.4
    - Below a ceiling, as described in subsection 3.5 and in subsection 3.6
- Use a category 5e (or better) UTP cable to connect each SMART HOPPING® 2.0 AP to the SMART HOPPING® infrastructure.
- The total length of UTP cable from the SMART HOPPING® 2.0 AP to the SMART HOPPING® Sync Unit to the network switch cannot exceed 328 ft. (100 m.)

SMART HOPPING® 2.0 Access Point

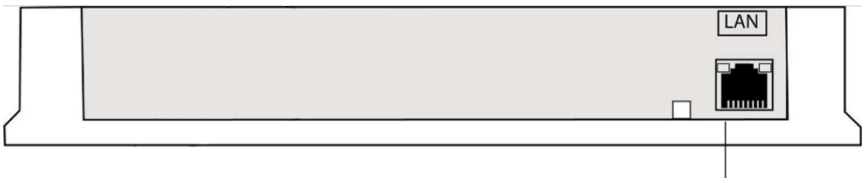

Figure 5: SMART HOPPING® 2.0 Access Point

Ethernet interface to
SMART HOPPING® Sync

3.9 Access Point startup sequence

Upon power on/start up, the SMART HOPPING® 2.0 AP performs a Power-on-Self-Test (POST) to ensure that its basic components are fully functional.

This test detects critical system failures. As the test progresses the state of the system is displayed through a series of color combinations on the four LEDs on the front of the AP. All four LEDs illuminate AMBER color, the power/sync LED illuminates GREEN, the network and radio LEDs flash GREEN, and the fourth LED turns off (not illuminated) indicating correct startup. If a test fails, the LEDs are left in a state which indicates the point at which the test failed. When the system is transmitting data, the radio and network LEDs on the AP flicker on and off as data is transmitted.

3.10 Access Point configuration information

For details about configuring the SMART HOPPING® 2.0 APs, please refer to reference no. 2.

4 Maintaining the SMART HOPPING® 2.0 Access Point

This section provides procedures and information for maintaining the SMART HOPPING® 2.0 AP and includes:

- Troubleshooting the AP using its LEDs
- Replacing the AP
- Ordering replacement units

4.1 Access Point test and inspection

Complete test and inspection procedures for the AP are provided in reference no. 2. Perform these procedures when the SMART HOPPING® 2.0 AP is initially installed and after servicing the unit.

4.2 Troubleshooting the Access Point using its LEDs

For information on the Status LEDs, please refer to subsection in 2.3.2.

You can also see the AP LED status from the **Access Point Controller** web page. Here, you can also configure the AP LEDs to be on or off.

If the status LED indicators are not functioning properly as indicated, perform the appropriate troubleshooting procedures. If you cannot resolve the problem with the LEDs, then note the LED lighting and sequence of colors, replace the unit, and return the defective unit to your supplier with the explanation of LEDs sequence and colors displayed. For complete AP replacement procedures, please refer to reference no. 2.

4.3 Replacing the Access Point

To repair a non-working AP, replace the unit. Individual AP components, PC assemblies, or subassemblies are not available for purchase.

If an AP does not work properly, contact your supplier for information on ordering a replacement unit and returning the defective unit.

When replacing defective equipment on your SMART HOPPING® infrastructure, be sure to follow the procedures given in reference no. 2.

4.4 Replacement parts

For SMART HOPPING® 2.0 Access Point 2.4GHz, you can order the following replacement parts:

Item	Part number
RTX3471 SH2.0 Access Point 2.4GHz	94100009
SH2.0 Frame rail[1]	94100012
SH2.0 Cosmetic ring	94100013
SH2.0 Cosmetic cover	94100014

Table 19: Ordering Access Point replacement parts